Werkzeugsysteme // Tooling Systems

Sauter Sternrevolver VDI40 Trifix®

Mittelmaß / Center high

Angetrieben / Driven	Statisch / Static
120mm	120mm

Sauter
Sternrevolver VDI40 Trifix®

DMG MORI
CLX 450/550/750 V6 VDI40 Trifix® ▪ CTX 2500 VDI40 Trifix® ▪ CTX beta/gamma 4A VDI40 Trifix®

German Standards
BRAND OF THE CENTURY 2022

EWS Tool Technologies

Bewegung, Schnelligkeit, Präzision – das ist die Welt von EWS. Wir nennen es „Precision meets Motion“, weil wir uns der Bedeutung von Präzision für die Zukunft unserer Kunden und Zielmärkte bewusst sind.

Höchste Qualitätsansprüche und größtes Engagement für die optimale Ausführung unserer Produkte in Form und Funktion stehen dabei im Mittelpunkt. Dafür investieren wir gezielt in modernste Fertigungslinien und entwickeln mit externen Instituten Methoden zur Qualitätssicherung.

Garant für unsere Spitzenleistungen in Entwicklung und Produktion ist dabei das hohe Ausbildungsniveau unserer Mitarbeiter.

Mit Kompetenz und Zuverlässigkeit möchten wir unsere Kunden in der Beratung, im täglichen Austausch und in der Projektabwicklung immer wieder von unseren Leistungen und unserem Service überzeugen.

Motion, speed, precision – this is the world of EWS. We call it “Precision meets Motion”, because we are aware of the importance of precision for the future of our customers and target markets.

Our focus is on highest quality standards and utmost commitment to ensure an optimal design of our products in form and function. For this purpose, we systematically invest in state-of-the-art production lines and develop methods for quality assurance in cooperation with external institutions.

Our top performance in development and production is backed up by the high level of training of our staff members.

Competence and reliability in our advisory services, our daily communication and project management – these are the core elements convincing our customers of our performance and services over and over again.

EWS
Tool Technologies

EWS.Varia VX3

Das Wechselsystem für sicheres und schnelles Rüsten!

The change system for safe and quick setup!

Varia Katalog / Catalogue

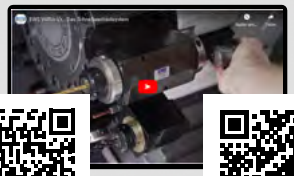

Produktvideo

Product video

Start Kit 1: VX3STARTKIT1

- 2x Spannzangeneinsatz ER25L30 (Nr.: 31.VX325L30)
  2x Collet insert ER25L30 (No.: 31.VX325L30)
- 1x Spannzangenschlüssel ER25 (Nr.: 225)
  1x Collet wrench ER25 (No.: 225)
- 2x Tool-Tags (Nr.: PT.VX3)
  2x Tool-Tags (No.: PT.VX3)
- 1x Drehmomentschlüssel (Nr.: DSV SW5/05.7NM)
  1x Torque wrench (No.: DSV SW5/05.7NM)
- 1x Montageblock (Nr.: MB-VX3)
  1x Mounting block (No.: MB-VX3)

Start Kit 2 „professionell“ : VX3STARTKIT2

- 1x T-Carrier TC-100 (Nr.: TP-100 VX3-20)
  1x T-Carrier TC-100 (No.: TP-100 VX3-20)
- 4x Spannzangeneinsatz ER25L30 (Nr.: 31.VX325L30)
  4x Collet insert ER25L30 (No.: 31.VX325L30)
- 1x Spannzangenschlüssel ER25 (Nr.: 225)
  1x Collet wrench ER25 (No.: 225)
- 1x Spannzangeneinsatz IM ER20L17 (Nr.: 31.VX320IML17)
  1x Collet insert IM ER20L17 (No.: 31.VX320IML17)
- 1x Spannzangenschlüssel für IM ER20 (Nr.: 220AX)
  1x Collet wrench for internal nut ER20 (No.: 220AX)
- 1x Adapter für Kombihalter Ø32 (Nr.: 19.32VX3-ZYL)
  1x Adapter for combi holder Ø32 (No.: 19.32VX3-ZYL)
- 5x Tool-Tags (Nr.: PT.VX3)
  5x Tool-Tags (No.: PT.VX3)
- 1x Drehmomentschlüssel (Nr.: DSV SW5/05.7NM)
  1x Torque wrench (No.: DSV SW5/05.7NM)
- 1x Montageblock (Nr.: MB-VX3)
  1x Mounting block (No.: MB-VX3)

EWS.Varia VX4

Das Wechselsystem für sicheres und schnelles Rüsten!

The change system for safe and quick setup!

Varia Katalog / Catalogue

Produktvideo

Product video

Start Kit 1: VX4STARTKIT1

- 2x Spannzangeneinsatz ER32L30 (Nr.: 31.VX432L30)
  2x Collet insert ER32L30 (No.: 31.VX432L30)
- 1x Spannzangenschlüssel ER32 (Nr.: 232)
  1x Collet wrench ER32 (No.: 232)
- 2x Tool-Tags (Nr.: PT.VX4)
  2x Tool-Tags (No.: PT.VX4)
- 1x Drehmomentschlüssel (Nr.: DSV SW5/05.7NM)
  1x Torque wrench (No.: DSV SW5/05.7NM)
- 1x Montageblock (Nr.: MB-VX4)
  1x Mounting block (No.: MB-VX4)

Start Kit 2 „professionell“ : VX4STARTKIT2

- 1x T-Carrier TC-100 (Nr.: TP-100 VX4-20)
  1x T-Carrier TC-100 (No.: TP-100 VX4-20)
- 4x Spannzangeneinsatz ER32L30 (Nr.: 31.VX432L30)
  4x Collet insert ER32L30 (No.: 31.VX432L30)
- 1x Spannzangenschlüssel ER32 (Nr.: 232)
  1x Collet wrench ER32 (No.: 232)
- 1x Spannzangeneinsatz IM ER25L16 (Nr.: 31.VX425IML16)
  1x Collet insert IM ER25L16 (No.: 31.VX425IML16)
- 1x Spannzangenschlüssel für IM ER25 (Nr.: 225AX)
  1x Collet wrench for internal nut ER25 (No.: 225AX)
- 1x Adapter für Kombihalter Ø40 (Nr.: 19.40VX4-ZYL)
  1x Adapter for combi holder Ø40 (No.: 19.40VX4-ZYL)
- 5x Tool-Tags (Nr.: PT.VX4)
  5x Tool-Tags (No.: PT.VX4)
- 1x Drehmomentschlüssel (Nr.: DSV SW5/05.7NM)
  1x Torque wrench (No.: DSV SW5/05.7NM)
- 1x Montageblock (Nr.: MB-VX4)
  1x Mounting block (No.: MB-VX4)

SAMMELMAPPE ÜBERSICHT [1/1

Außendrehen/External Turning

0

Kollisionsptimierte Halter PL Anschraub.

0

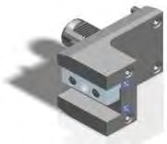

turning holder left hand

MNR: S04525
4.4025RL-PL
Square 25

Double serration (Lizenz Traub)

1

turning holder left hand

MNR: 190684
4.4025RLIK-PL
Square 25

Internal coolant supply
Double serration (Lizenz Traub)

2

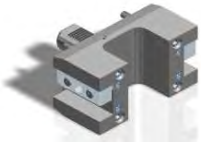

Multi purpose OD/ID holder

MNR: S04524
15.4025-PL
Square 25

3

Multi purpose OD/ID holder

MNR: 188151
15.4025IK-PL
Square 25

Internal coolant supply

4

Einsatz Y Achse / Use Y axis

0

SAMMELMAPPE ÜBERSICHT [2/1

Multi purpose OD/ID holder

MNR: 169772
15.4025QY-PL
Square 25

5

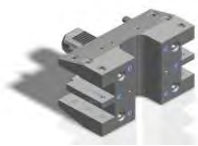

Multi purpose OD/ID holder

MNR: 218176
15.4025QYIK-PL
Square 25

Internal coolant supply

6

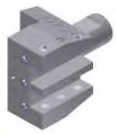

turning holder left hand

MNR: 170535
4.4025DYRL
Square 25

Double serration (Lizenz Traub)

7

turning holder left hand

MNR: 186514
4.4025DYRLIK
Square 25

Internal coolant supply
Double serration (Lizenz Traub)

8

Capto C4 Außendrehhalter

0

turning holder left hand

MNR: 178104
4.40C4RL-PLL75
CAPTO C4

Double serration (Lizenz Traub)

10

turning holder, right hand

MNR: 167105
1.40C4RL-PLL75
CAPTO C4

Double serration (Lizenz Traub)

11

SAMMELMAPPE ÜBERSICHT [3/1

Boring bar holder

MNR: 114733
19.40C4L75L
CAPTO C4

left hand

12

Boring bar holder

MNR: S00111
19.40C4L75R
CAPTO C4

right hand

13

Multi purpose OD/ID holder

MNR: S04682
15.40C4-PL
CAPTO C4

14

Drehhalter ohne PL nicht kollsiosoptim.

0

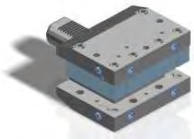

Multi purpose OD/ID holder

MNR: 196066
15.4025CTXIK
Square 25

Internal coolant supply

20

Multi purpose OD/ID holder

MNR: 137280
15.4025QY
Square 25

21

Multi purpose OD/ID holder

MNR: 203430
15.4025QYIK
Square 25

Internal coolant supply

22

EWS Group

SAMMELMAPPE ÜBERSICHT [4/1

Abstechen/Cutoff tool

0

Infeed / Cut-off tool holder

MNR: S01327
32.4032WT250RLIK
Size 32

Internal coolant supply
Double serration (Lizenz Traub)

30

Infeed / Cut-off tool holder

MNR: S04093
32.4032WT250RLÜKIK
Size 32

Internal coolant supply
double ser. Lizenz Traub, overhead

31

Infeed / Cut-off tool holder

MNR: S04322
32.4032FLEXRLIK
Size 32

Internal coolant supply
Double serration (Lizenz Traub)

32

Innendrehen / Internal Turning

0

Combi holder for int/ext. cooling

MNR: 219581
17.4040LDCTX-PL
hole-Ø 40 mm

40

Combi holder for int/ext. cooling

MNR: S05016
17.4040LDCTXTF-PL
hole-Ø 40 mm

adjusting system for trifix turret

41

SAMMELMAPPE ÜBERSICHT [5/1

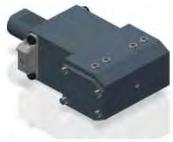

Combi holder for int/ext. cooling

MNR: S04178
17.4040LDCTXTF
hole-Ø 40 mm

adjusting system for trifix turret

42

Combi holder for int/ext. cooling

MNR: S05287
17.4040LCTX-PL
hole-Ø 40 mm

43

Combi holder for int/ext. cooling

MNR: 199371
17.4040LCTXRLZ0-PL
hole-Ø 40 mm

Double serration (Lizenz Traub)

44

Combi holder for int/ext. cooling

MNR: 200789
17.4040LCTXRLTFLZ0-PL
hole-Ø 40 mm

Trifix-alignment left
Double serration (Lizenz Traub)

45

Combi holder for int/ext. cooling

MNR: 176286
17.4040LCTXRLTFRZ0-PL
hole-Ø 40 mm

Trifix-alignment right
Double serration (Lizenz Traub)

46

Combi holder for int/ext. cooling

MNR: 195732
17.4040LDCTXZ10/Z-100-PL
hole-Ø 40 mm

47

Double with X offset

0

EWS Group

SAMMELMAPPE ÜBERSICHT [6/1

Combi holder for int/ext. cooling

MNR: 179358
17.4040DCTXX93X142
hole-Ø 40 mm

48

Einsatz Y Achse / Use Y axis

0

Combi holder for int/ext. cooling

MNR: 219582
17.4040QYLCTXRLZ30Z80-PL
hole-Ø 40 mm

Double serration (Lizenz Traub)

49

Reduzierhülsen/Reducing sleeves DIA4

0

Reducing sleeve

MNR: 111112
28.4008-32S-SATZ
hole -Ø 8 - 32 mm

401

Reducing sleeve

MNR: 136376
28.4006S
hole -Ø 6 mm

402

Reducing sleeve

MNR: 136377
28.4008S
hole -Ø 8 mm

403

EWS Group

SAMMELMAPPE ÜBERSICHT [7/1

Reducing sleeve

MNR: 136378
28.4010S
hole -Ø 10 mm

404

Reducing sleeve

MNR: 136379
28.4012S
hole -Ø 12 mm

405

Reducing sleeve

MNR: 136381
28.4016S
hole -Ø 16 mm

406

Reducing sleeve

MNR: 136384
28.4020S
hole -Ø20 mm

407

Reducing sleeve

MNR: 136385
28.4025S
hole -Ø 25 mm

408

Reducing sleeve

MNR: 136388
28.4032S
hole -Ø 32 mm

409

Reducing sleeve

MNR: 160321
28.4016S-GEW
hole -Ø 16 mm

410

SAMMELMAPPE ÜBERSICHT [8/1

Reducing sleeve

MNR: S04009
28.4020S-GEW
hole -Ø20 mm

411

Reducing sleeve

MNR: 163928
28.4025S-GEW
hole -Ø 25 mm

412

StatischZentrumbohren / StaticCenterdri

0

Combi holder for int/ext. cooling

MNR: 173816
17.40VX4LDCTXTF
EWS Varia VX4 - Adaptor

adjusting system for trifix turret

50

Combi holder for int/ext. cooling

MNR: 206383
17.40VX4LDCTXTF-PL
VXVX4

adjusting system for trifix turret

51

Boring bar holder

MNR: 209239
19.40VX4-ZYL
EWS Varia VX4 - Adaptor

52

VARIA Starterkits

0

EWS Group

SAMMELMAPPE ÜBERSICHT [9/1

MNR: 216493
VX4STARTKIT2
55

MNR: 216492
VX4STARTKIT1
56

AGW VARIA VX / Driven Tools VARIA
0

Axial drilling and milling head

MNR: 194843
40.40VX4CTXIKC
EWS - Varia X4 - Adaptor

i = 1:1 (input equal output)
6.000 1/min
63 Nm
Butterflyseal
IC/EC Ceramic pmax = 70bar
60

Axial drilling and milling head

MNR: 158496
40.40VX4CTX
EWS - Varia X4 - Adaptor

i = 1:1 (input equal output)
6.000 1/min
50 Nm
External coolant supply
61

Axial drilling and milling head

MNR: 164157
40.40VX4KRCTX
EWS - Varia X4 - Adaptor

i = 1:1 (input equal output)
5.000 1/min
50 Nm
External coolant supply
62

Radial drilling and milling head

MNR: 216416
60.40VX4LCTXRLIKD-CC4
EWS - Varia X4 - Adaptor

i =1:1 direction of rotation inver.
6.000 1/min
50 Nm
polygon profile gear
IC/EC Ceramic pmax = 70bar
63

SAMMELMAPPE ÜBERSICHT [10/

Sensor not possible

0

Radial drilling and milling head

MNR: 219335
60.40VX4LCTXRLIKD
EWS - Varia X4 - Adaptor

i =1:1 direction of rotation inver.
6.000 1/min
50 Nm
polygon profile gear
IC/EC Ceramic pmax = 70bar

64

Radial drilling and milling head

MNR: 219336
60.40VX4LCTXRLIKDTFL
EWS - Varia X4 - Adaptor

i =1:1 direction of rotation inver.
6.000 1/min
50 Nm
polygon profile gear
IC/EC Ceramic pmax = 70bar

65

Radial drilling and milling head

MNR: 219337
60.40VX4LCTXRLIKDTFR
EWS - Varia X4 - Adaptor

i =1:1 direction of rotation inver.
6.000 1/min
50 Nm
polygon profile gear
IC/EC Ceramic pmax = 70bar

67

Radial drilling and milling head

MNR: 213777
60.40VX4LCTXLIKDTF
EWS - Varia X4 - Adaptor

i =1:1 direction of rotation inver.
6.000 1/min
50 Nm
IC/EC Ceramic pmax = 70bar

68

Radial drilling and milling head

MNR: 213776
60.40VX4LCTXRIKDTF
EWS - Varia X4 - Adaptor

i =1:1 direction of rotation inver.
6.000 1/min
50 Nm
IC/EC Ceramic pmax = 70bar

69

Radial drilling and milling head

MNR: 219338
60.40VX4LDCTXRLIKD-PL
EWS - Varia X4 - Adaptor

i =1:1 direction of rotation inver.
6.000 1/min
50 Nm
polygon profile gear
IC/EC Ceramic pmax = 70bar

70

SAMMELMAPPE ÜBERSICHT [11/

Radial drilling and milling head

MNR: 169577
60.40VX4LDCTXRLIKDTFR-PL
EWS - Varia X4 - Adaptor

i =1:1 direction of rotation inver.
6.000 1/min
50 Nm
IC/EC Ceramic pmax = 70bar

71

Einsatz Y Achse / Use Y axis

0

Radial drilling and milling head

MNR: 208907
60.40VX3DYCTXRLTK70
EWS - Varia X3 - Adaptor

i = 1:1 (input equal output)
6.000 1/min
50 Nm / 25 Nm each spindle
External coolant supply

73

Radial drilling and milling head

MNR: 208908
60.40VX3QYCTXTK70
EWS - Varia X3 - Adaptor

i = 1:1 (input equal output)
6.000 1/min
50 Nm / 25 Nm each spindle
IC/EC Ceramic pmax = 70bar

74

AGW ohne VX / Driven Tools without V

0

Axial drilling and milling head

MNR: 208517
40.4032CTXIKC
For collet 320 470E (ER32 Ø3-20)

i = 1:1 (input equal output)
6.000 1/min
50 Nm
IC/EC Ceramic pmax = 70bar

80

Axial drilling and milling head

MNR: 195325
40.4032KCTXIKCIM
For collet 320 470E (ER32 Ø3-20)

i = 1:1 (input equal output)
6.000 1/min
63 Nm
Butterflyseal
IC/EC Ceramic pmax = 70bar

81

SAMMELMAPPE ÜBERSICHT [12/

Axial drilling and milling head

MNR: 100574
40.4032CTX
For collet 320 470E (ER32 Ø3-20)

i = 1:1 (input equal output)
6.000 1/min
50 Nm
External coolant supply

82

Radial drilling and milling head

MNR: 140399
60.4032LCTXLIKDIM
For collet 320 470E (ER32 Ø3-20)

i =1:1 direction of rotation inver.
6.000 1/min
50 Nm
IC/EC Ceramic pmax = 70bar

83

Radial drilling and milling head

MNR: 139320
60.4032LCTXLIM
For collet 320 470E (ER32 Ø3-20)

i =1:1 direction of rotation inver.
6.000 1/min
50 Nm
External coolant supply

84

Einsatz Y Achse / Use Y axis

0

Radial drilling and milling head

MNR: 155767
60.4025DYCTXRLTK60
For collet 250 430E (ER25 Ø2-16)

i = 1:1 (input equal output)
6.000 1/min
50 Nm / 25 Nm each spindle
External coolant supply

85

Schwenkköpfe / Swivel heads

0

Swivel head

MNR: 144013
63.4025CTXIKD
For collet 250 430E (ER25 Ø2-16)

i =1:1 direction of rotation inver.
10.000 1/min
20 Nm
IC/EC Ceramic pmax = 70bar

86

SAMMELMAPPE ÜBERSICHT [13/

Swivel head

MNR: 109831
63.4025CTX
For collet 250 430E (ER25 Ø2-16)

i =1:1 direction of rotation inver.
6.000 1/min
16 Nm
External coolant supply

87

Internal Turning and static drill VX3

0

Boring bar holder

MNR: 209428
19.40VX3-ZYL
Varia VX3

90

Spannschlüsselsätze

0

Wrench set

MNR: 220424
ER32

100

Wrench set

MNR: 220414
ER32IM

101

Wrench set

MNR: 220353
ER25

102

EWS Group

SAMMELMAPPE ÜBERSICHT [14/

Wrench set

MNR: 220352
ER25IM

103

Spanzangensätze

0

Collet

MNR: 140883
BG-322 470E NC SATZ-Ø3-20

Sealed

413

Collet

MNR: WS00023
BG-322 470E NC-ECDS-Ø3-20

Sealed

414

turning holder left hand

Pos.: 1
MNR: S04525
KTXT: 4.4025RL-PL

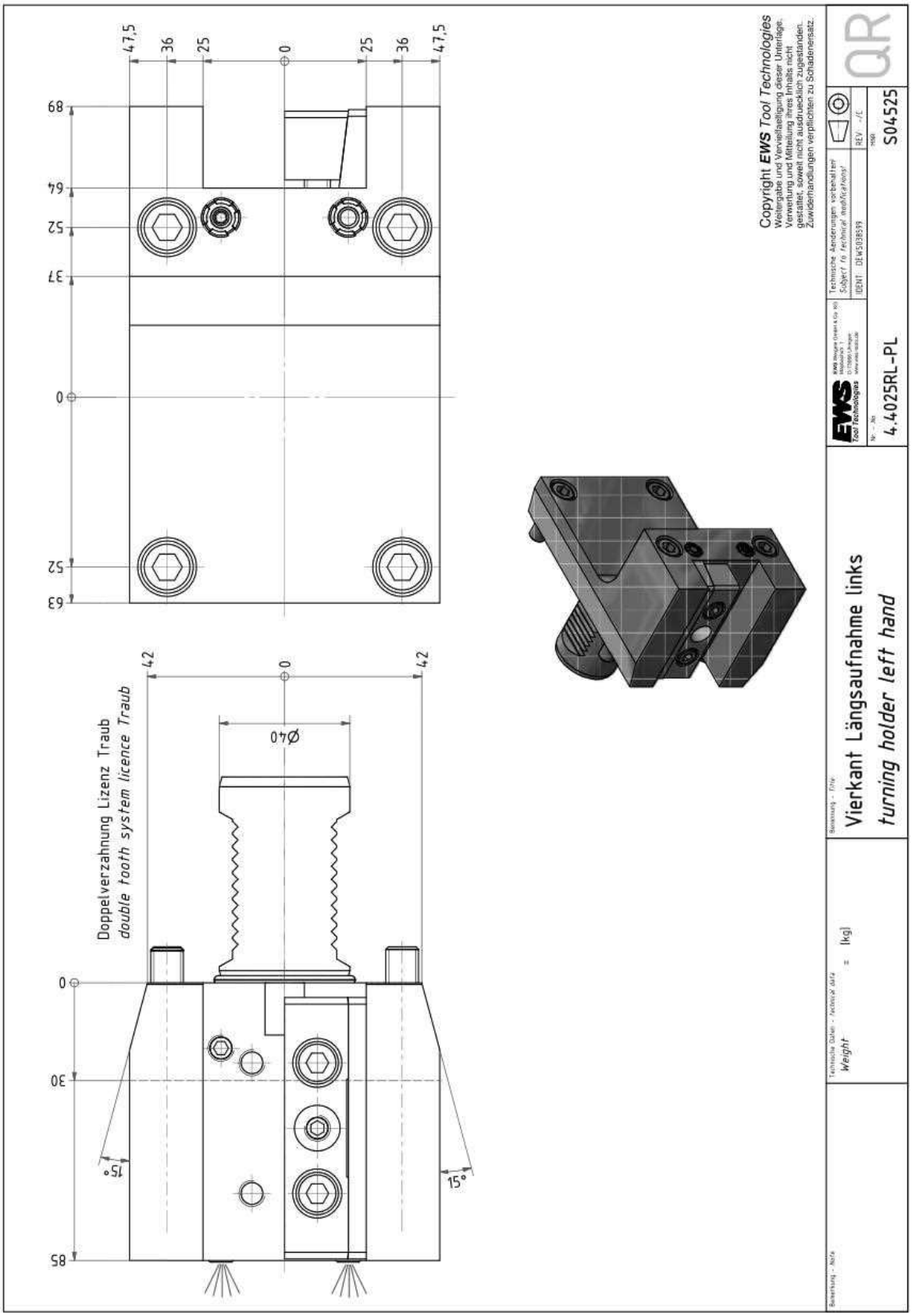

turning holder left hand

Pos.: 2
MNR: 190684
KTXT: 4.4025RLIK-PL

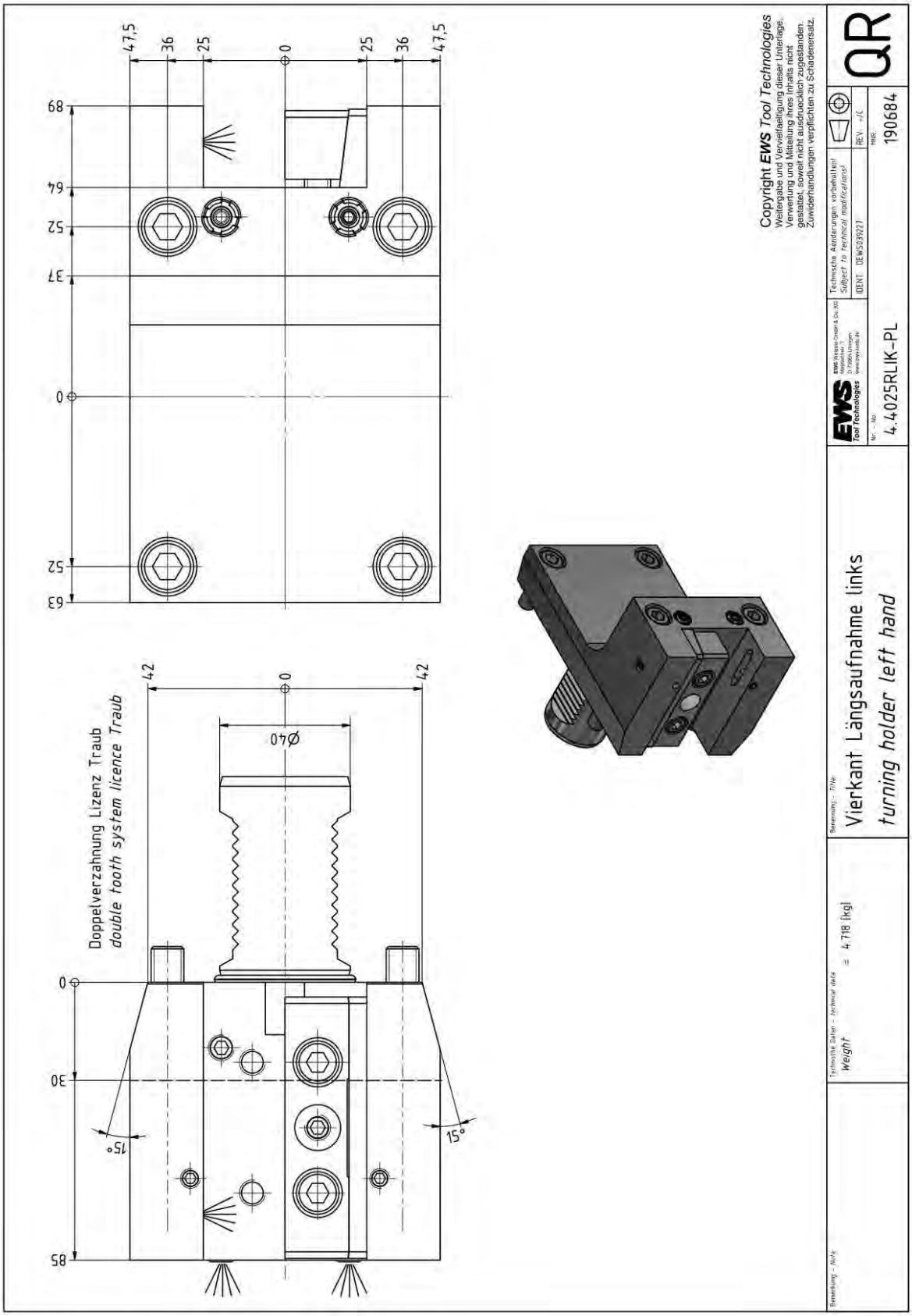

Multi purpose OD/ID holder

Pos.: 3
MNR: S04524
KTXT: 15.4025-PL

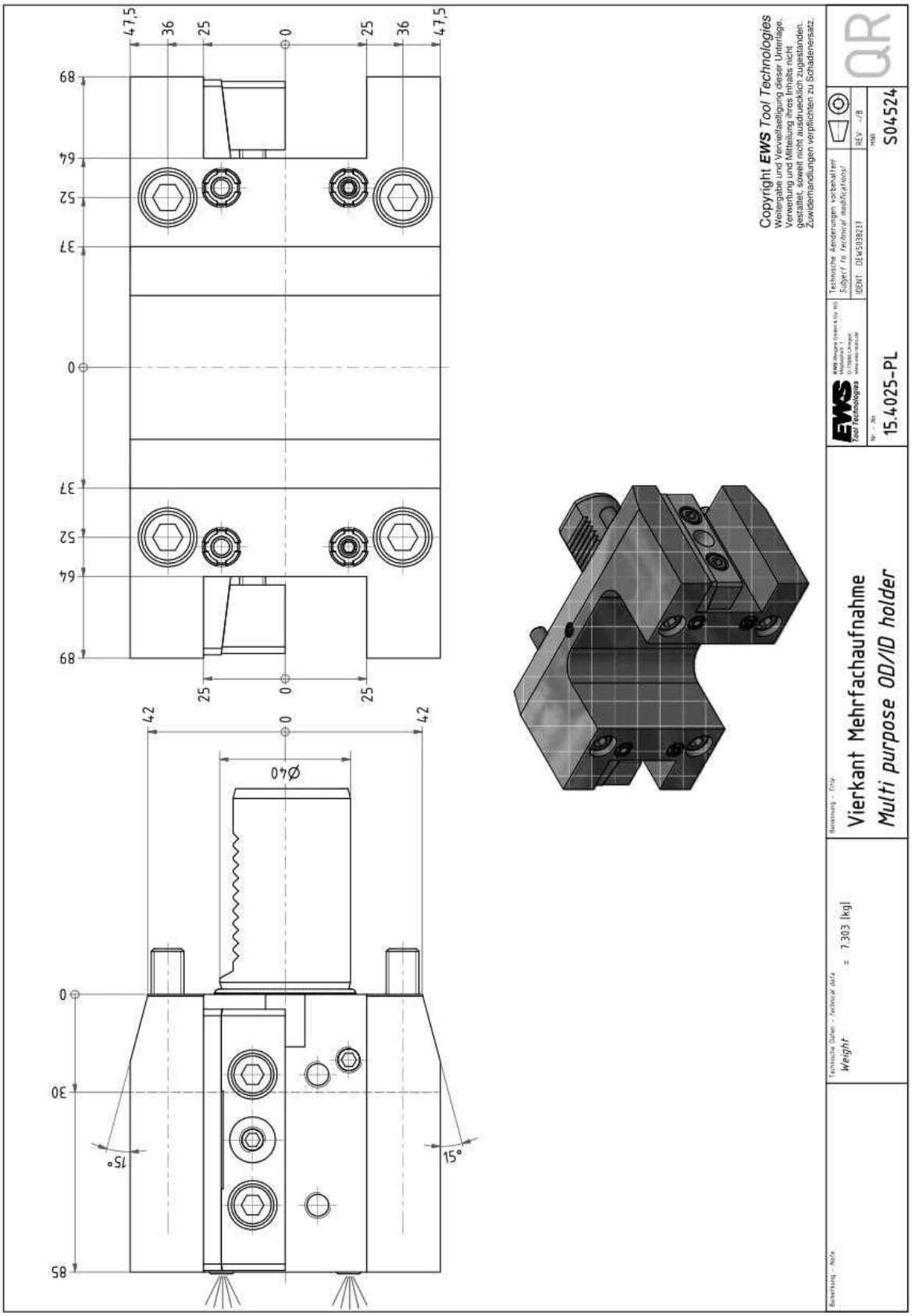

Multi purpose OD/ID holder

Pos.: 4
MNR: 188151
KTXT: 15.4025IK-PL

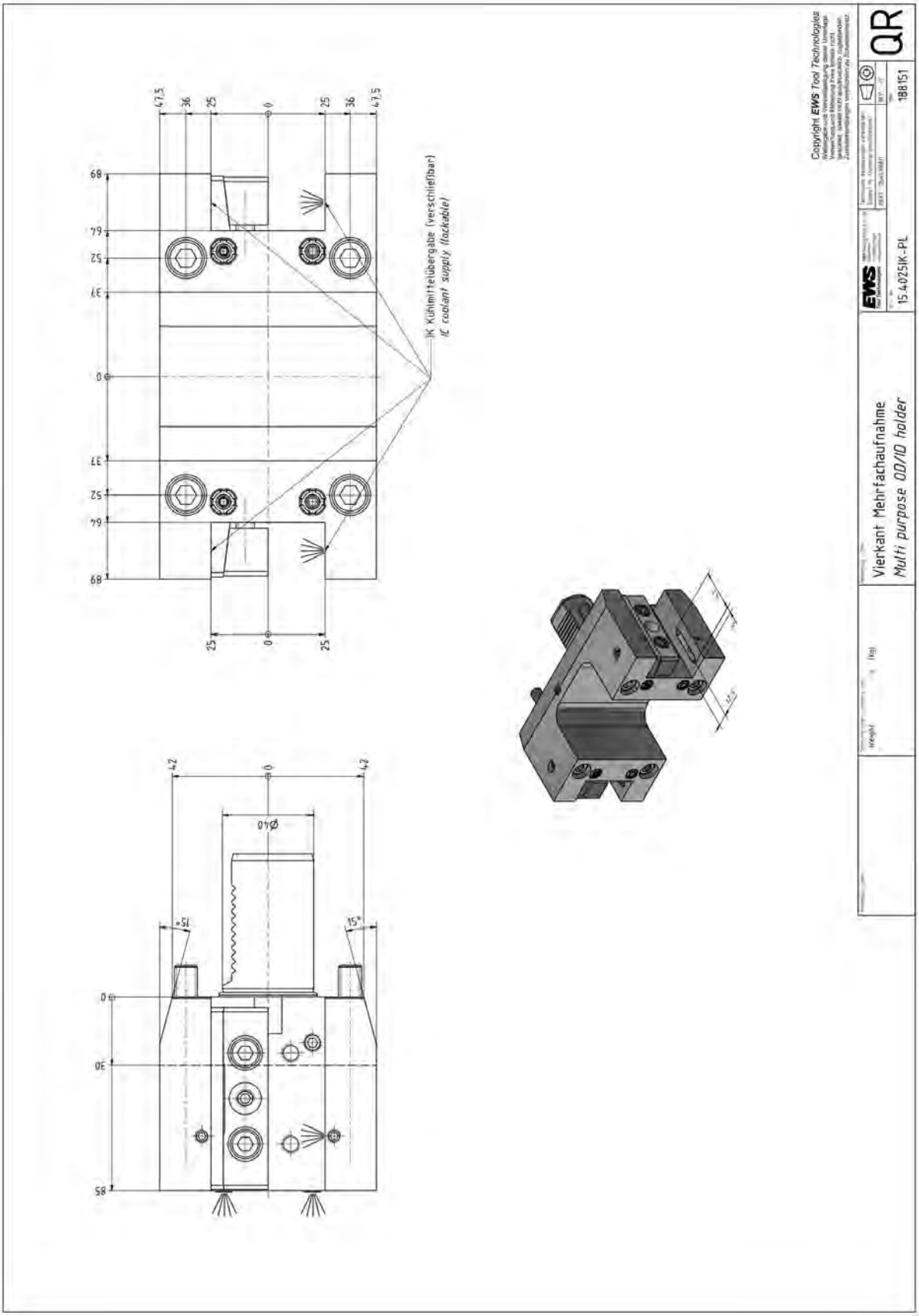

Multi purpose OD/ID holder

Pos.: 5
MNR: 169772
KTXT: 15.4025QY-PL

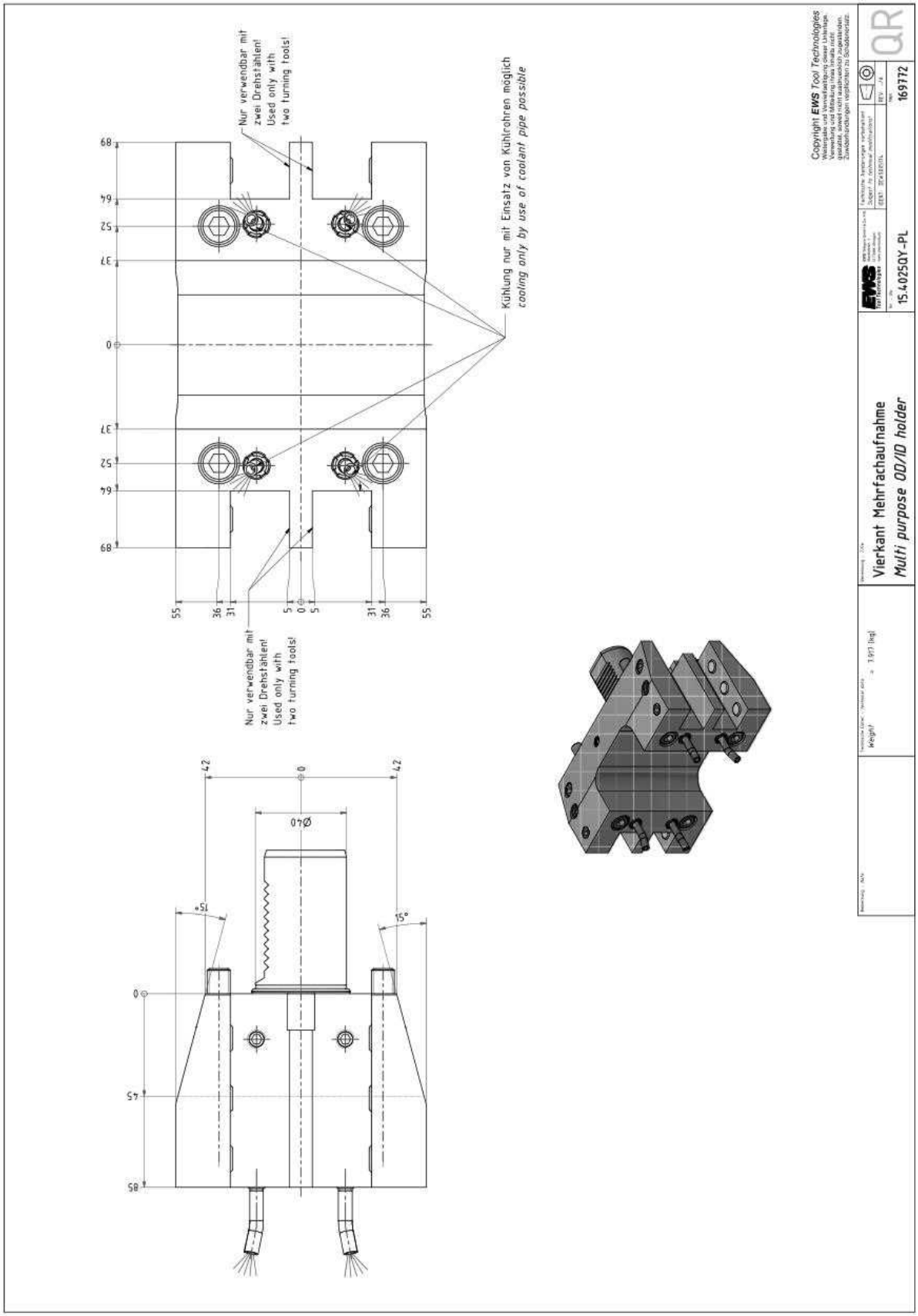

Multi purpose OD/ID holder

Pos.: 6
MNR: 218176
KTXT: 15.4025QYIK-PL

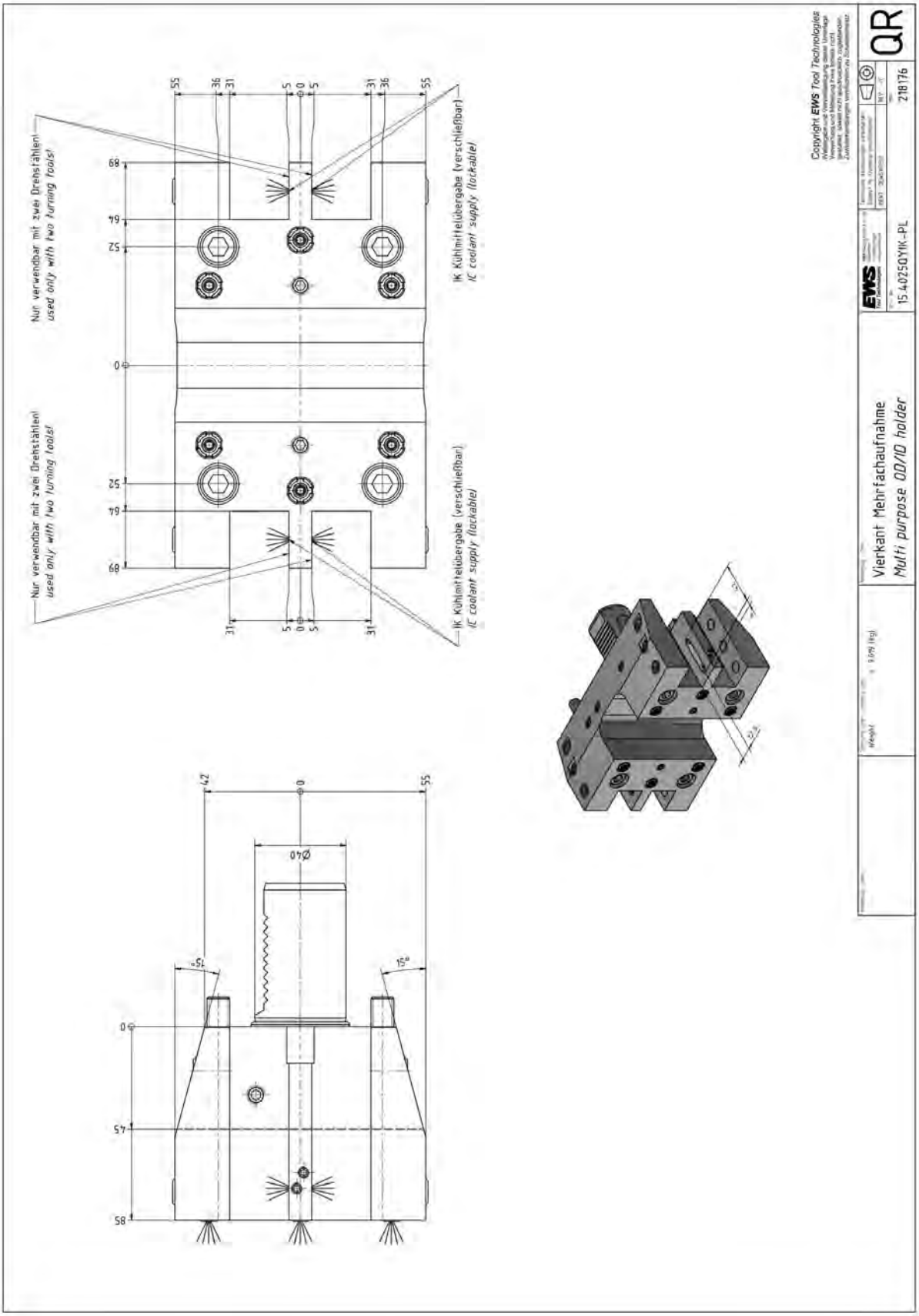

turning holder left hand

Pos.: 7
MNR: 170535
KTXT: 4.4025DYRL

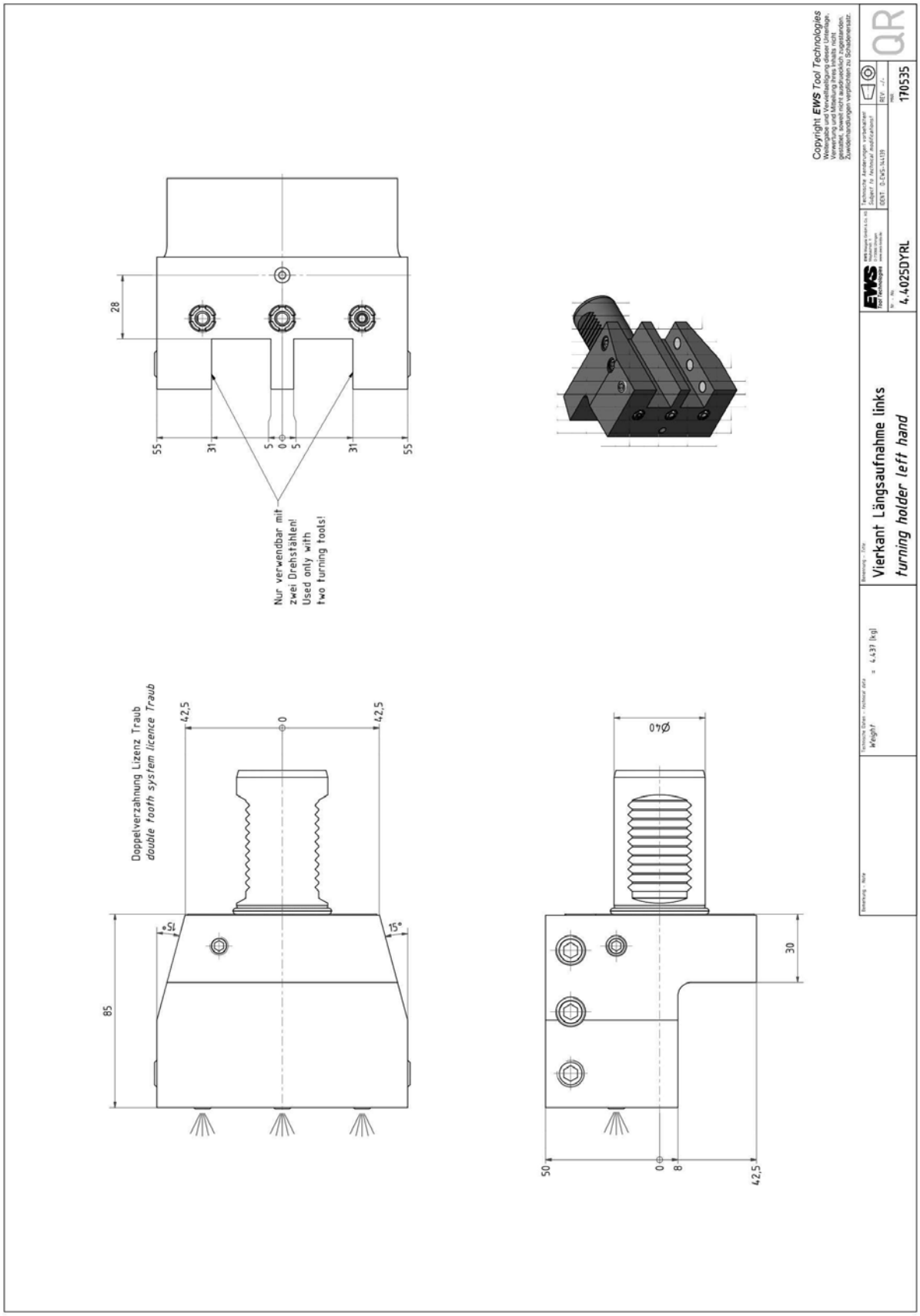

turning holder left hand

Pos.: 8
MNR: 186514
KTXT: 4.4025DYRLIK

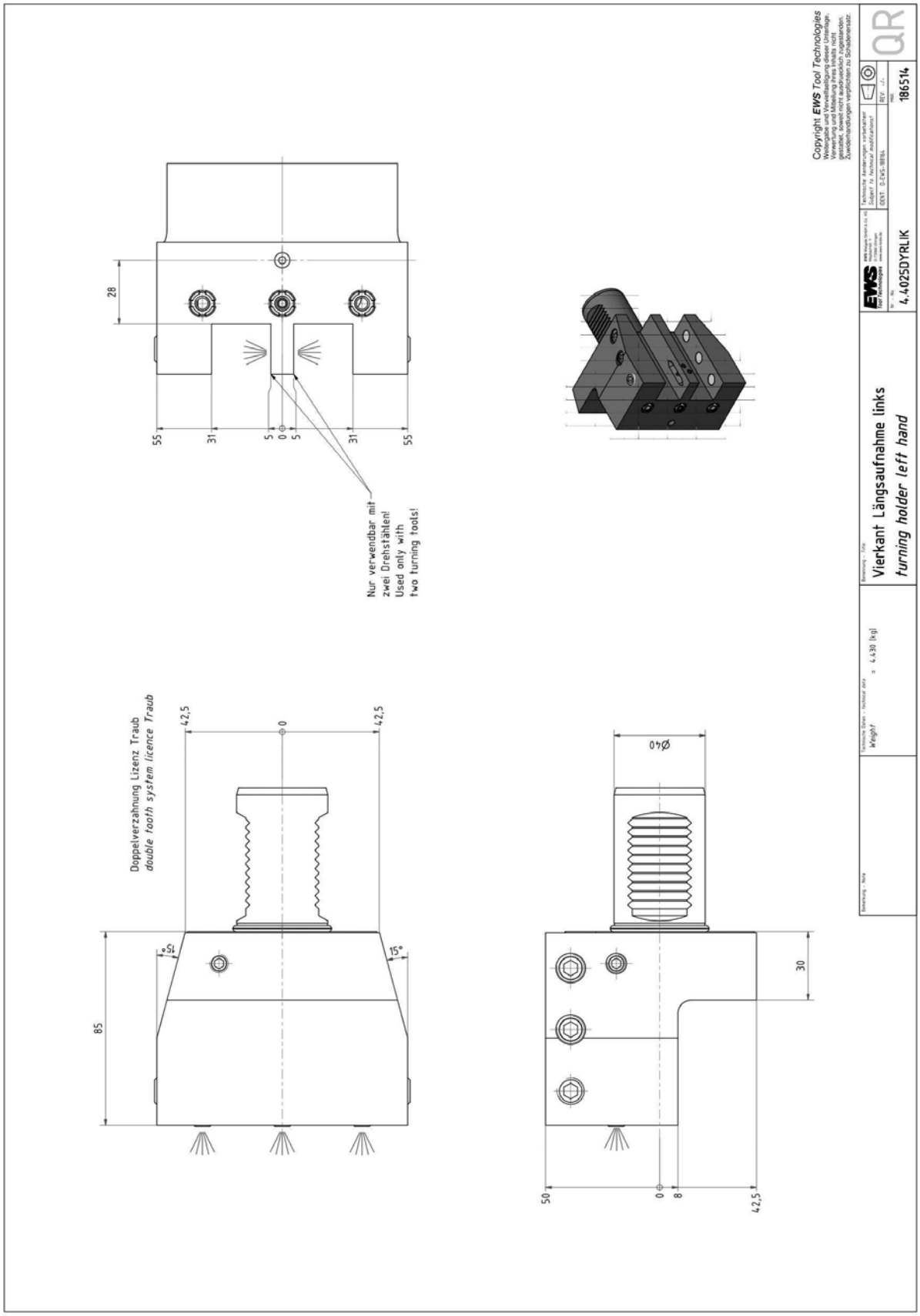

turning holder left hand

Pos.: 10
MNR: 178104
KTXT: 4.40C4RL-PLL75

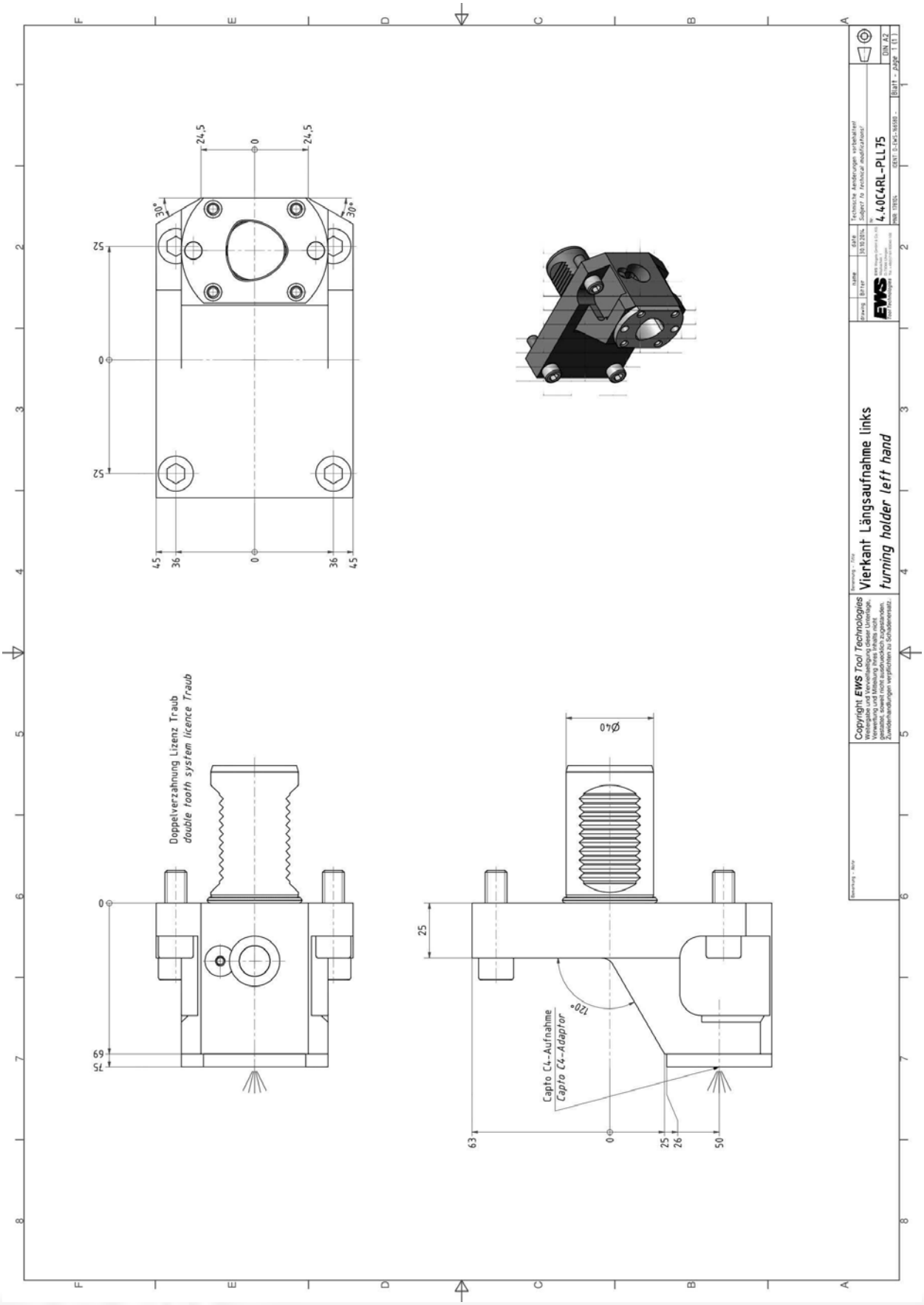

turning holder, right hand

Pos.: 11
MNR: 167105
KTXT: 1.40C4RL-PLL75

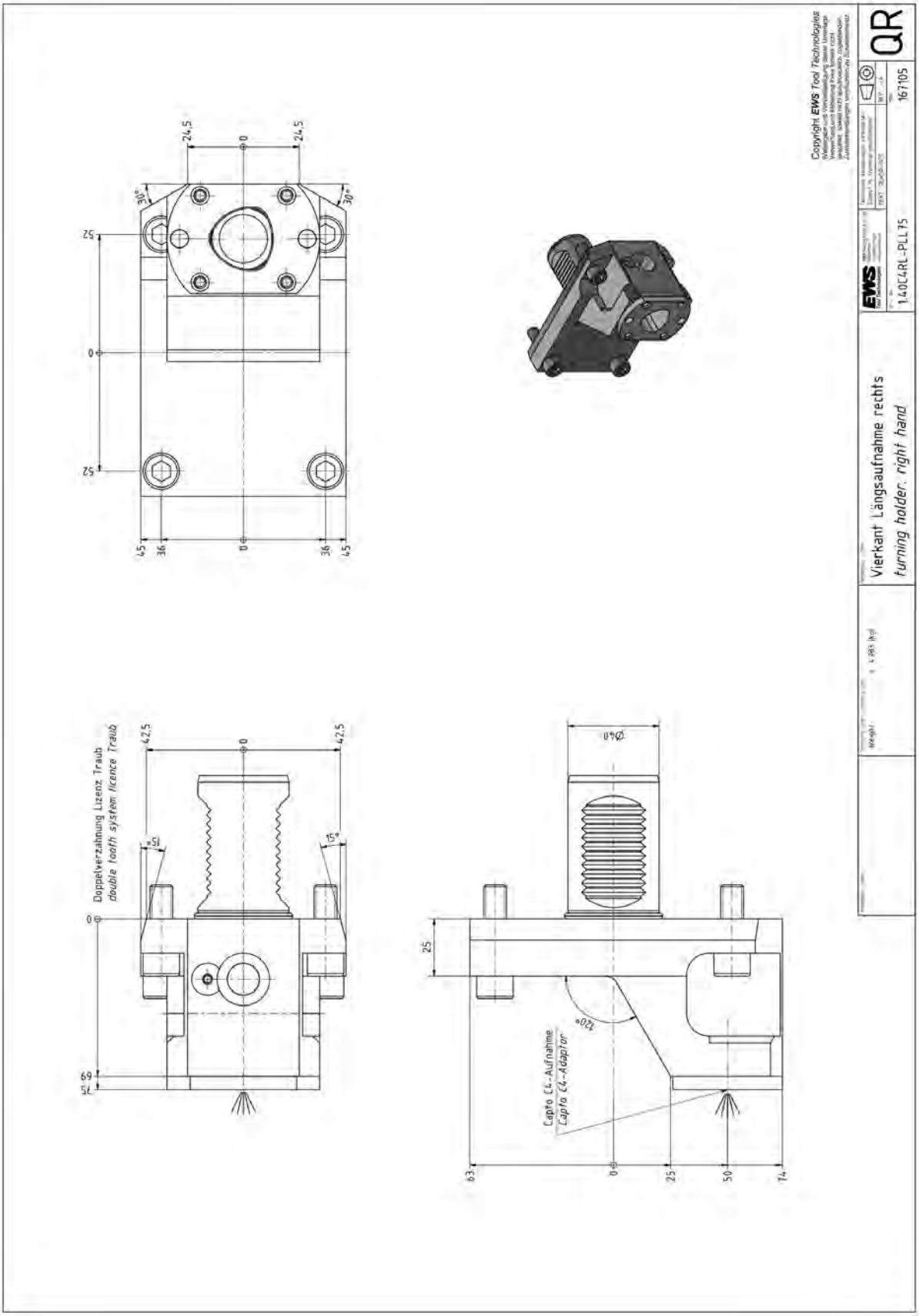

Boring bar holder

Pos.: 12
MNR: 114733
KTXT: 19.40C4L75L

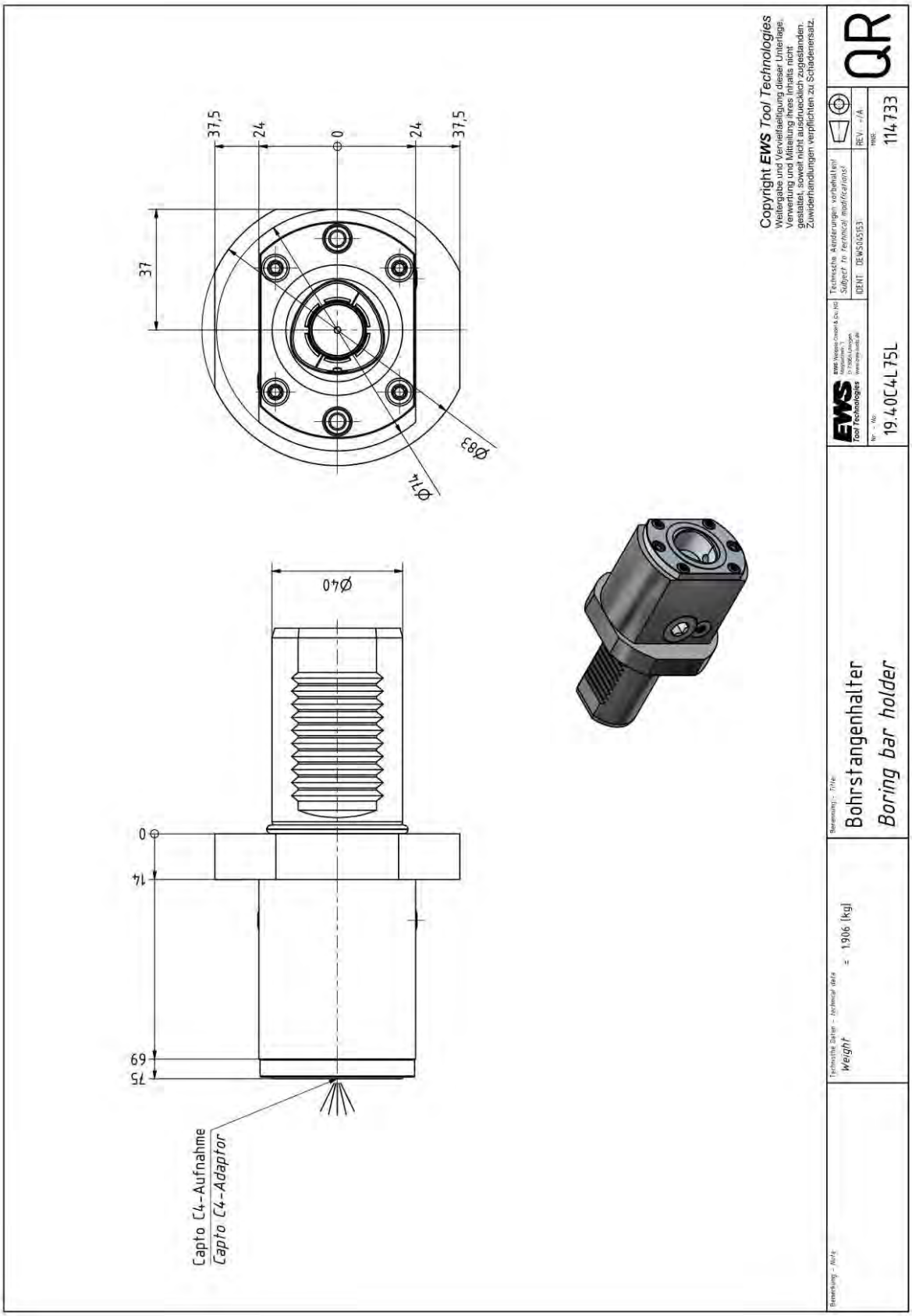

Boring bar holder

Pos.: 13
MNR: S00111
KTXT: 19.40C4L75R

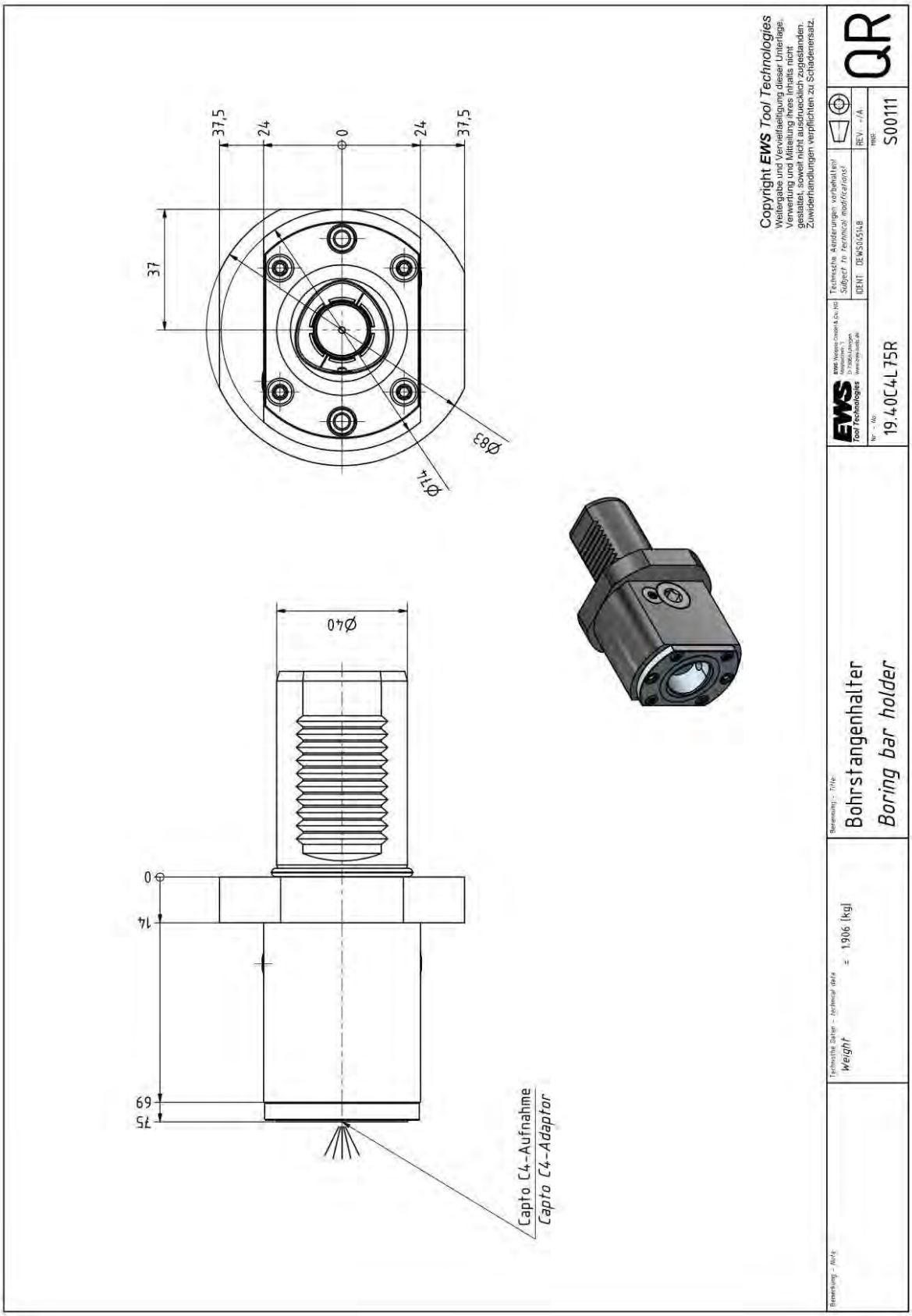

Multi purpose OD/ID holder

Pos.: 14
MNR: S04682
KTXT: 15.40C4-PL

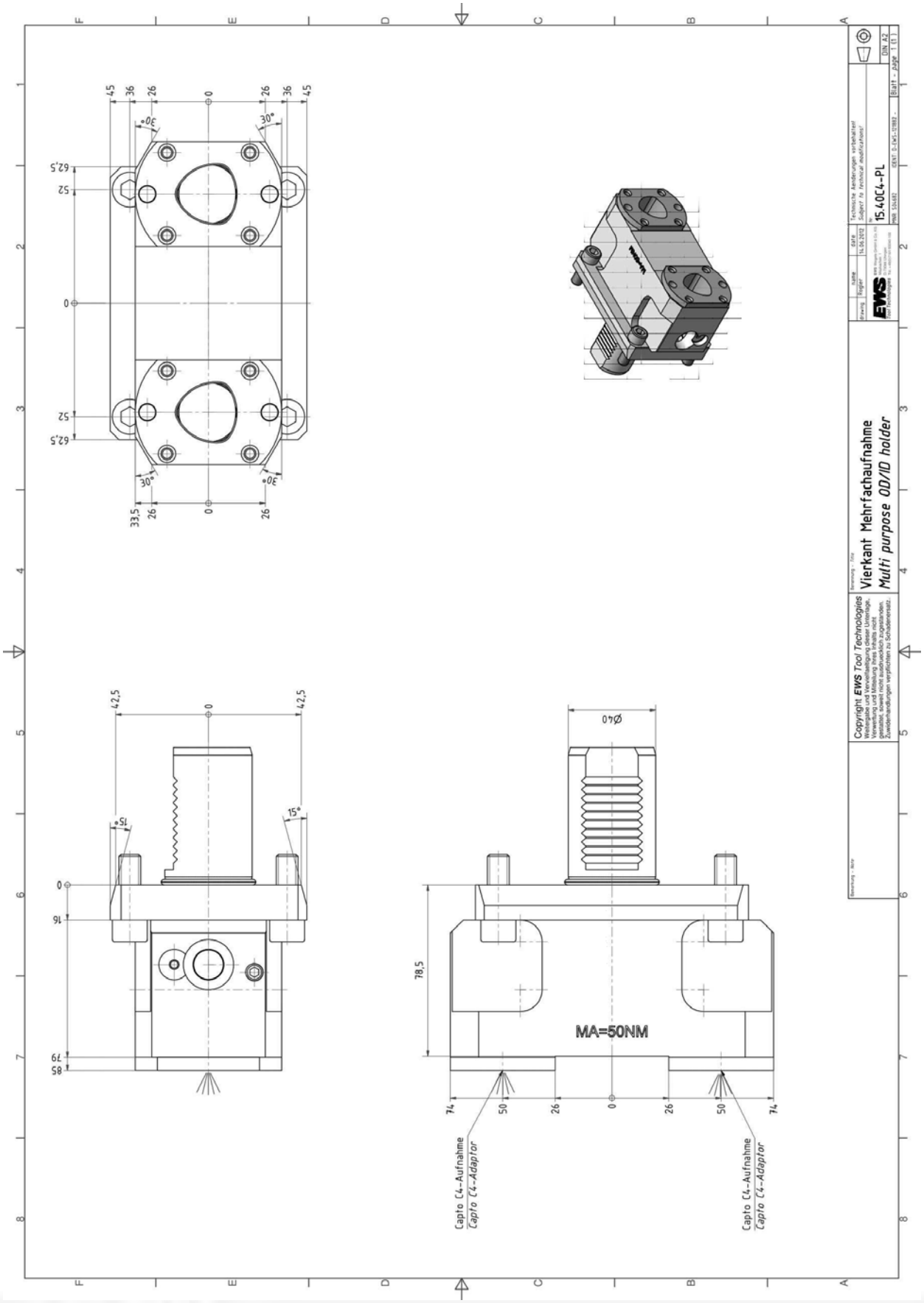

Multi purpose OD/ID holder

Pos.: 20
MNR: 196066
KTXT: 15.4025CTXIK

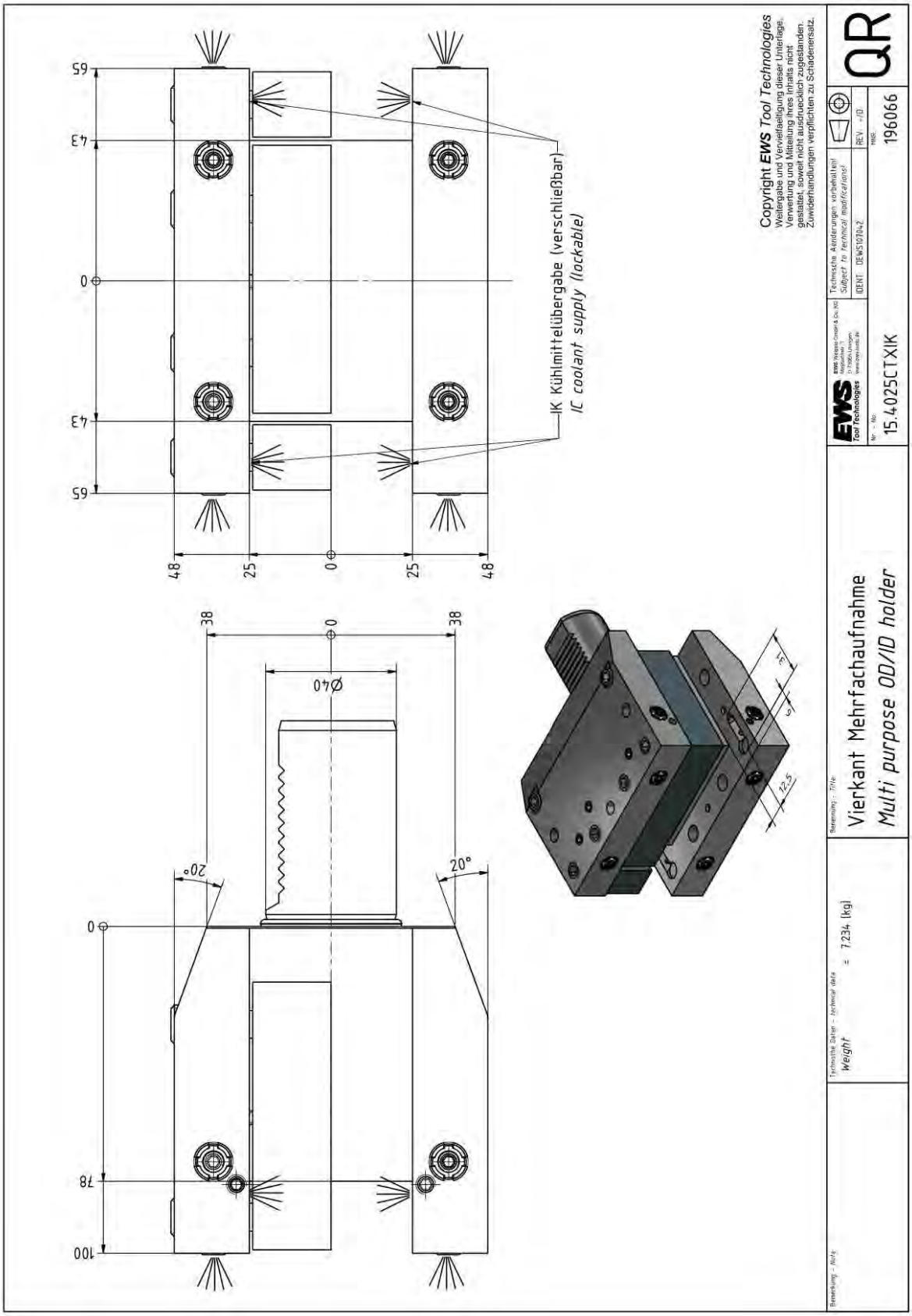

Multi purpose OD/ID holder

Pos.: 21
MNR: 137280
KTXT: 15.4025QY

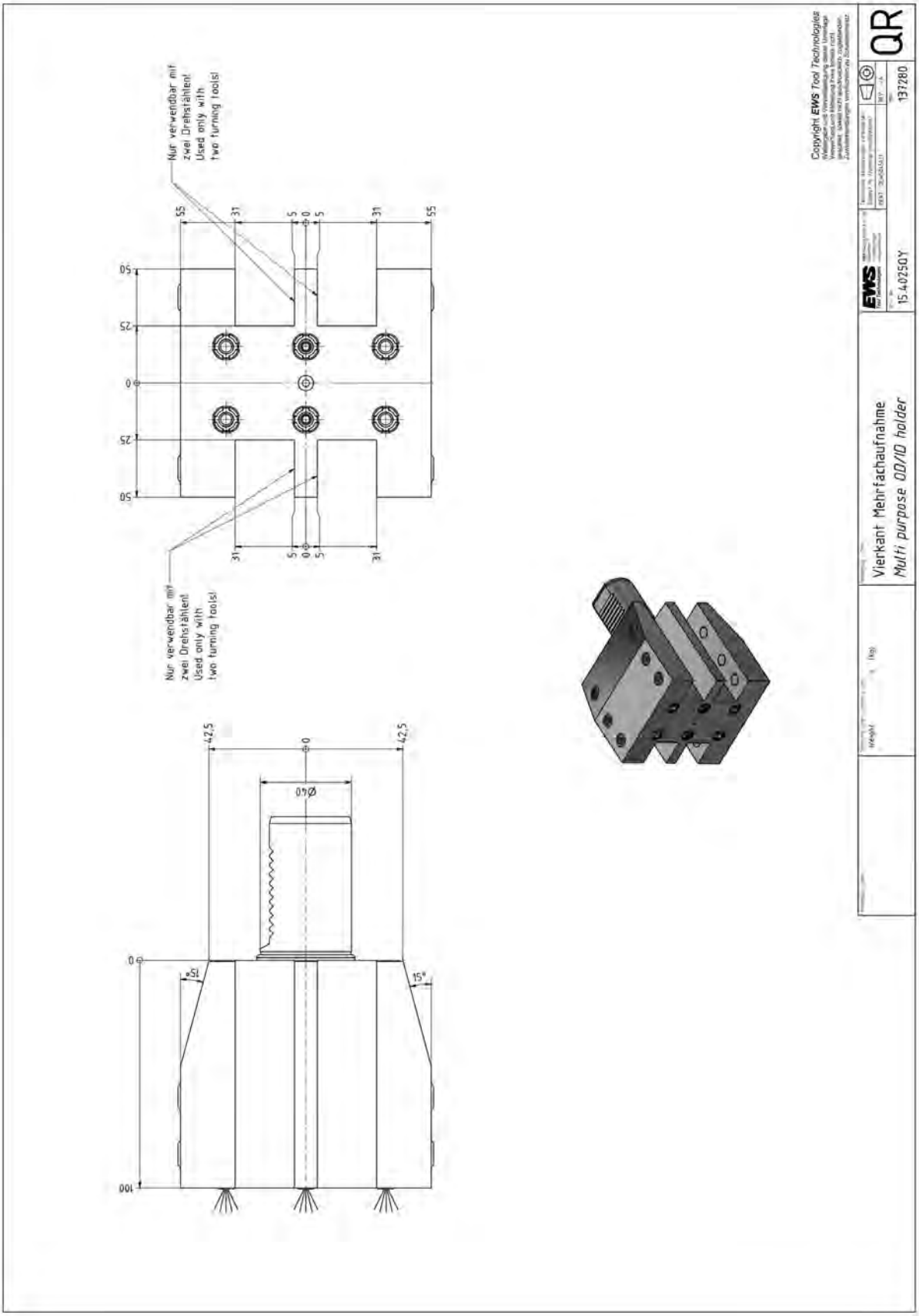

Multi purpose OD/ID holder

Pos.: 22
MNR: 203430
KTXT: 15.4025QYIK

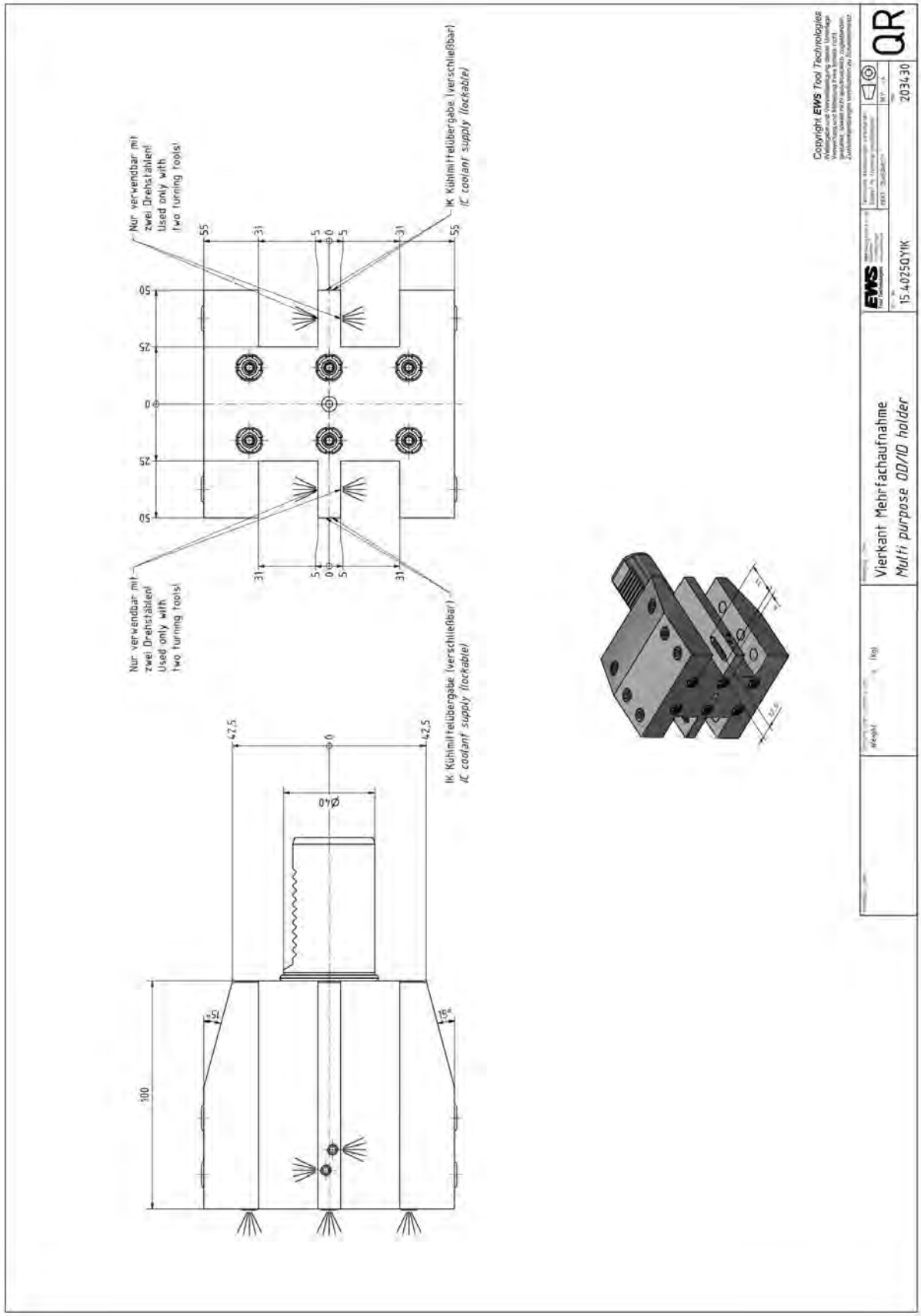

Infeed / Cut-off tool holder

Pos.: 30
MNR: S01327
KTXT: 32.4032WT250RLIK

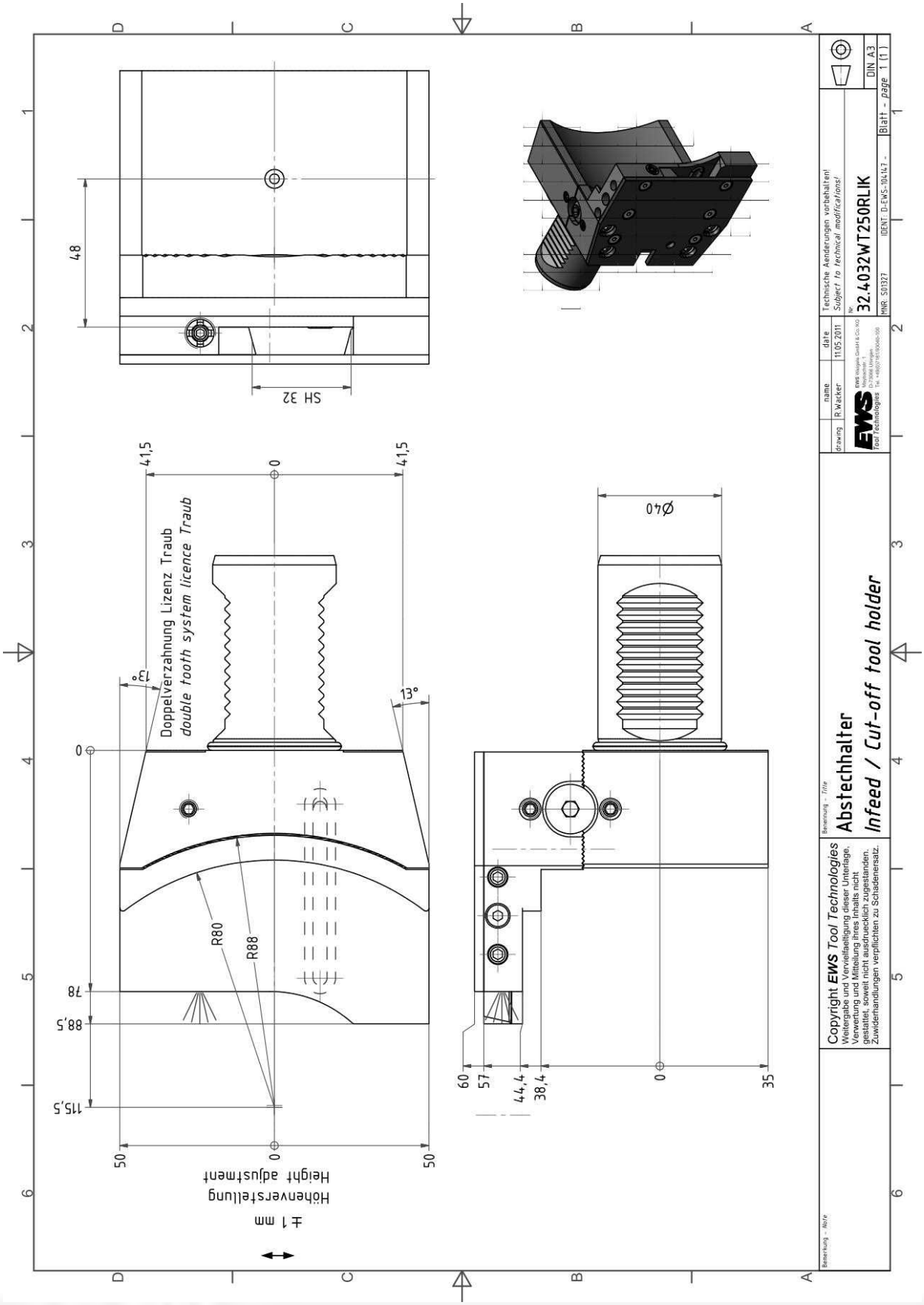

Infeed / Cut-off tool holder

Pos.: 31
MNR: S04093
KTXT: 32.4032WT250RLÜKIK

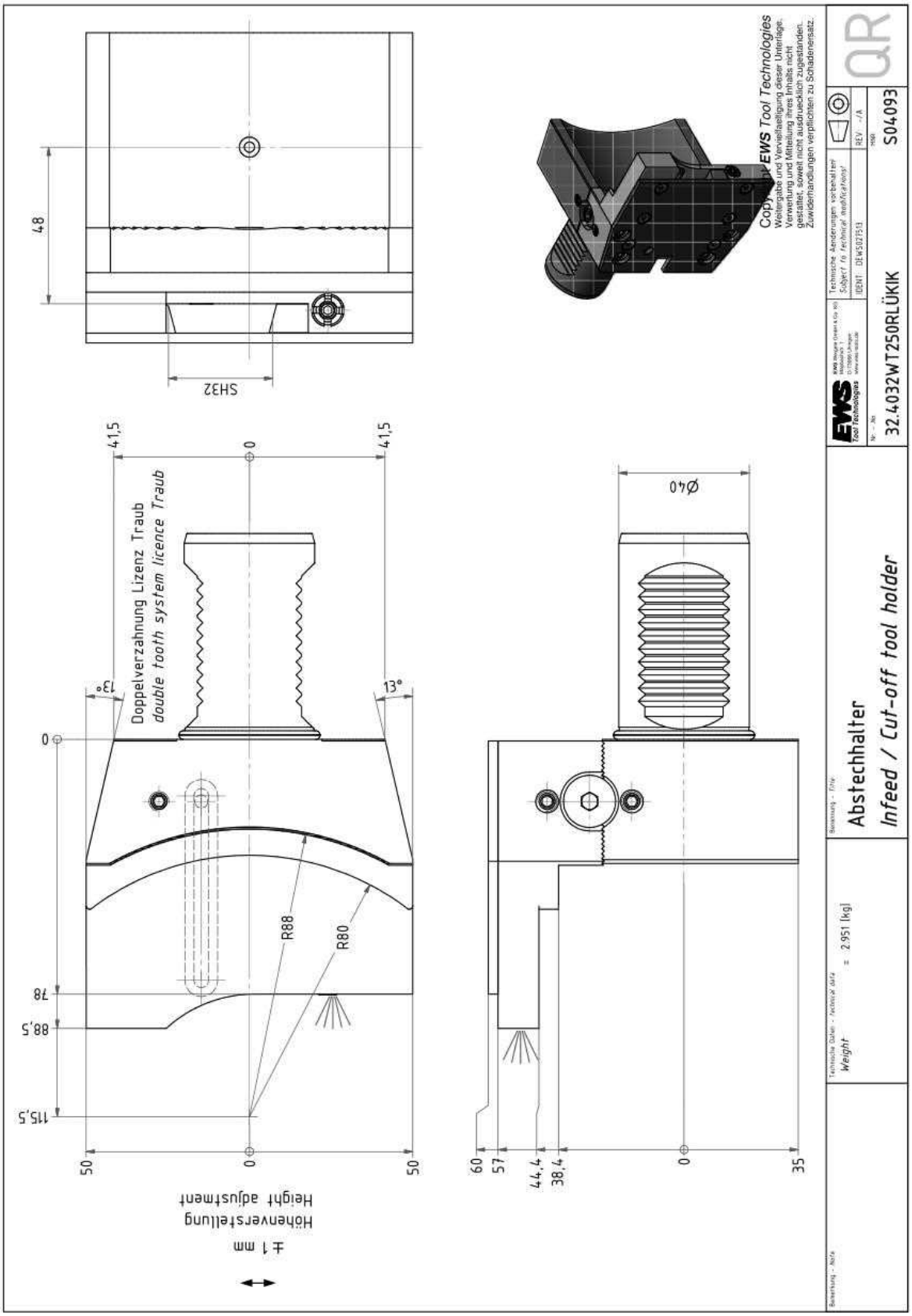

Infeed / Cut-off tool holder

Pos.: 32
MNR: S04322
KTXT: 32.4032FLEXRLIK

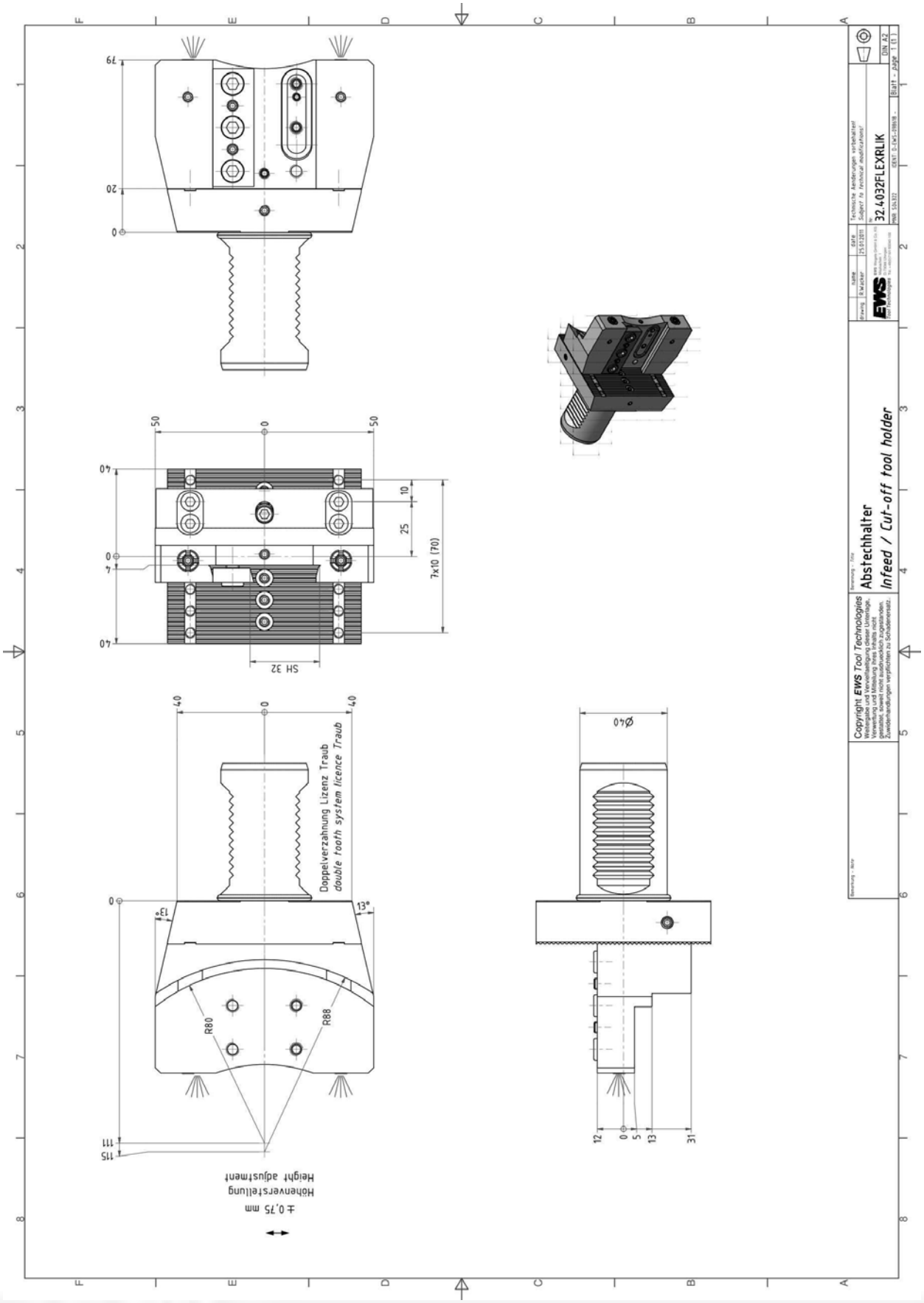

Combi holder for int/ext. cooling

Pos.: 40
MNR: 219581
KTXT: 17.4040LDCTX-PL

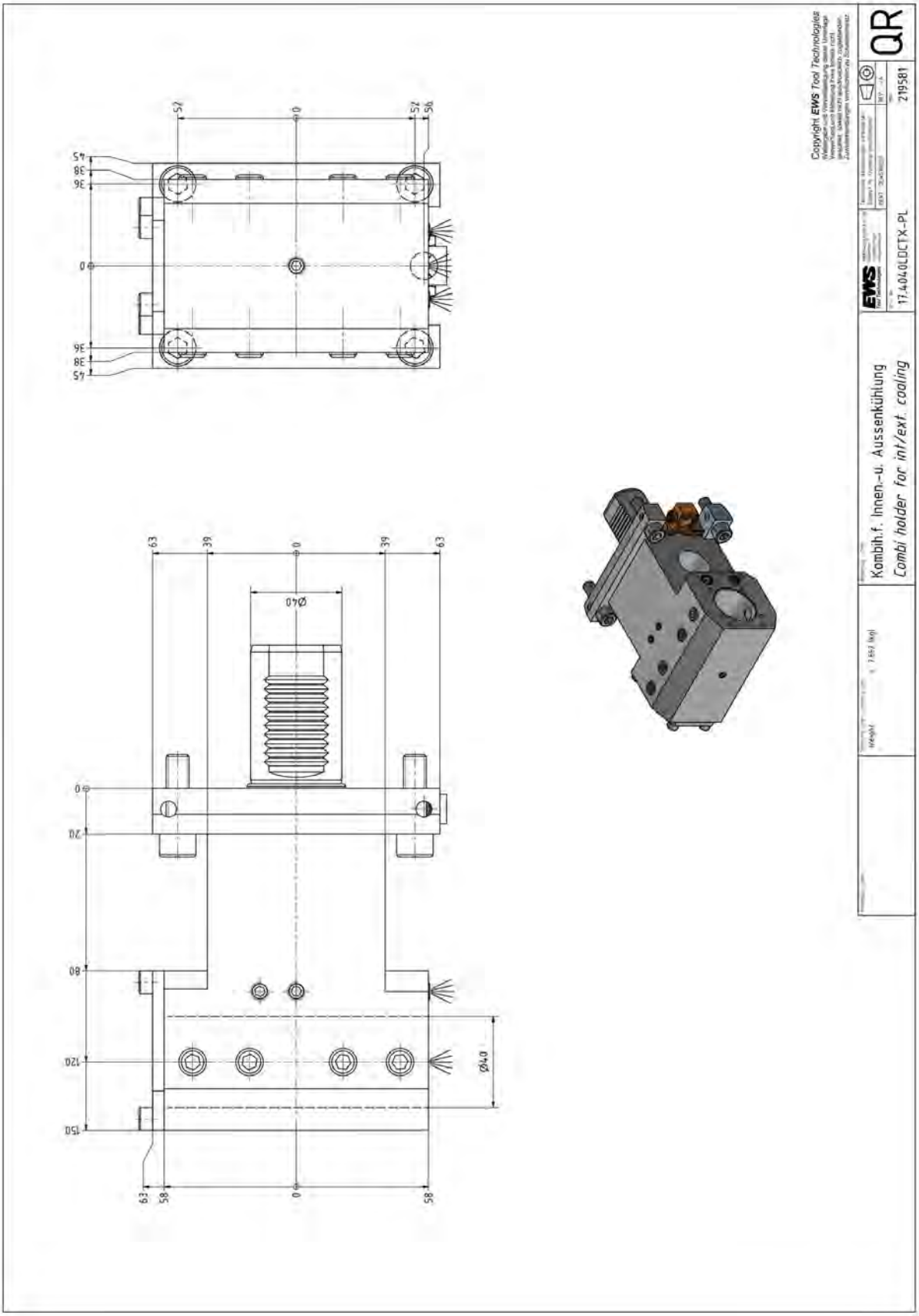

Combi holder for int/ext. cooling

Pos.: 41
MNR: S05016
KTXT: 17.4040LDCTXTF-PL

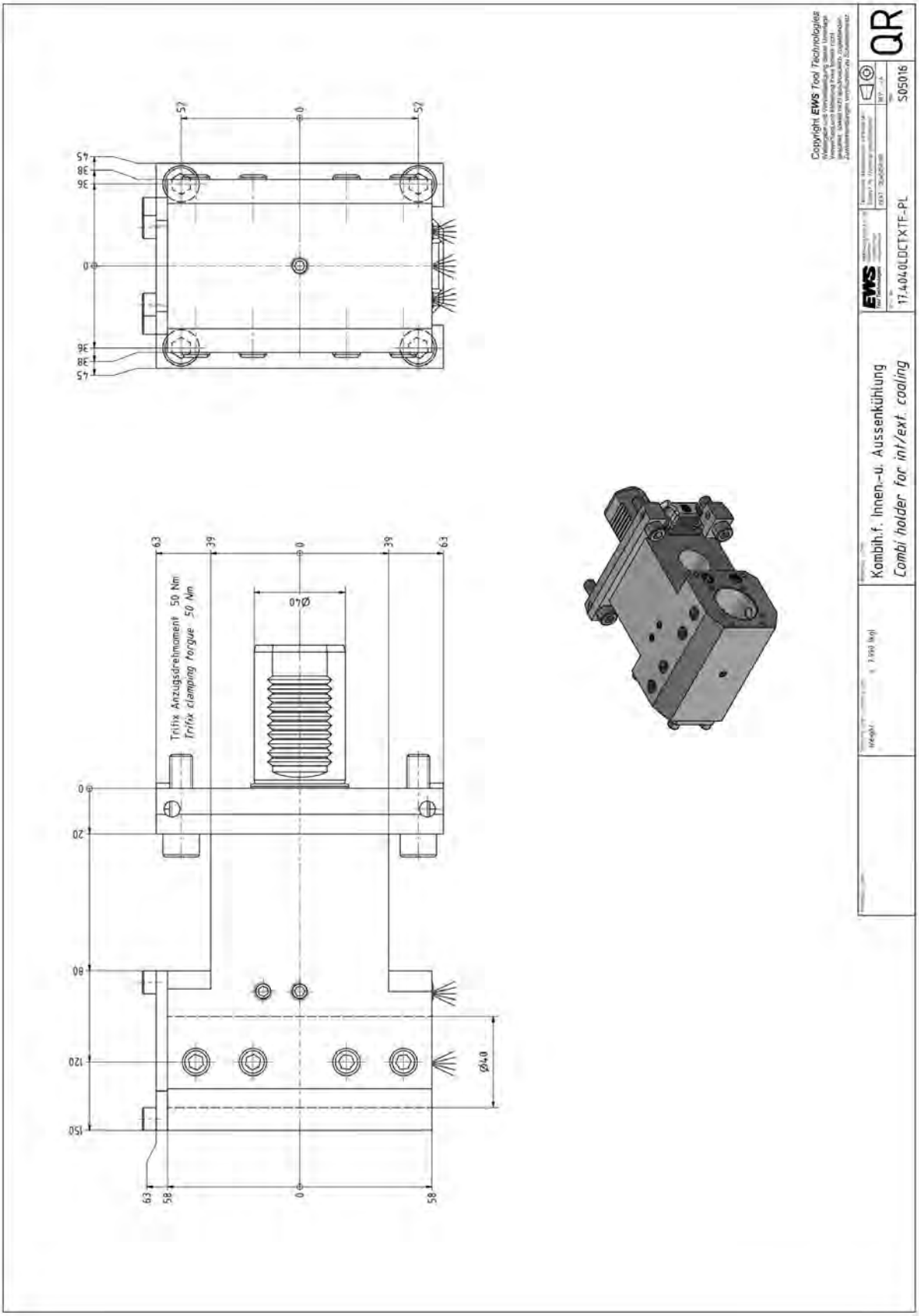

Combi holder for int/ext. cooling

Pos.: 42
MNR: S04178
KTXT: 17.4040LDCTXTF

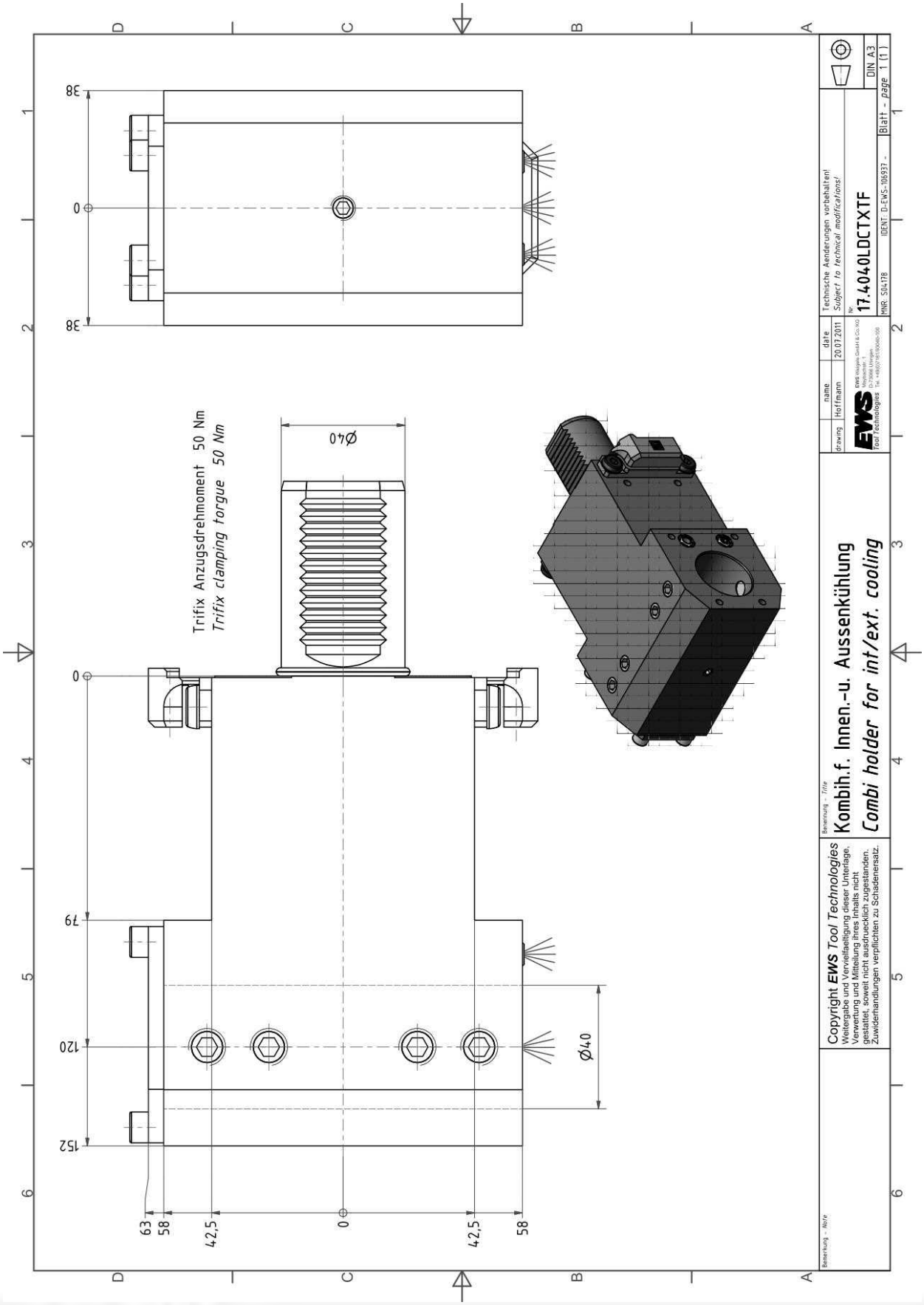

Combi holder for int/ext. cooling

Pos.: 43
MNR: S05287
KTXT: 17.4040LCTX-PL

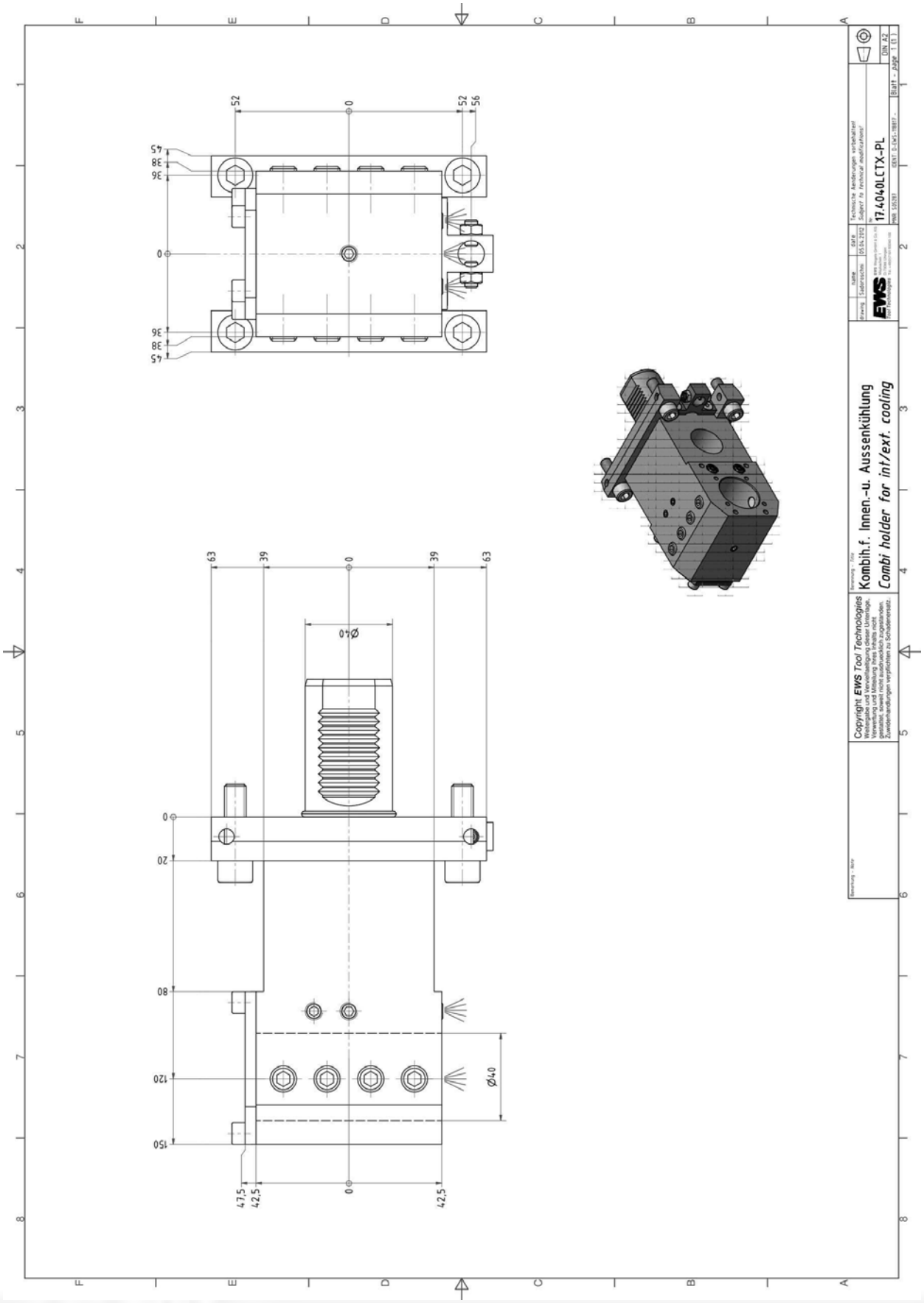

Combi holder for int/ext. cooling

Pos.: 44
MNR: 199371
KTXT: 17.4040LCTXRLZ0-PL

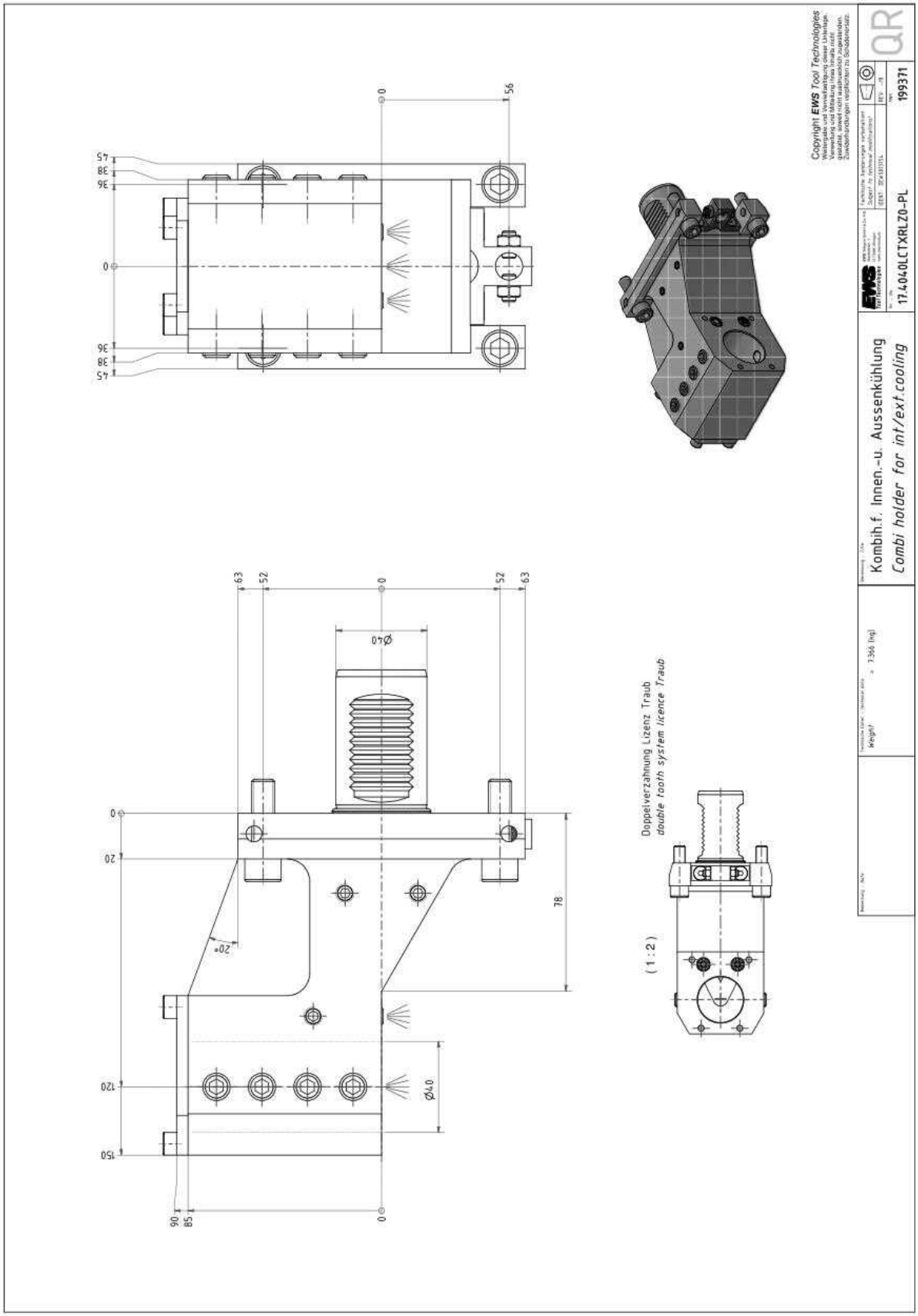

Combi holder for int/ext. cooling

Pos.: 45
MNR: 200789
KTXT: 17.4040LCTXRLTFLZ0-PL

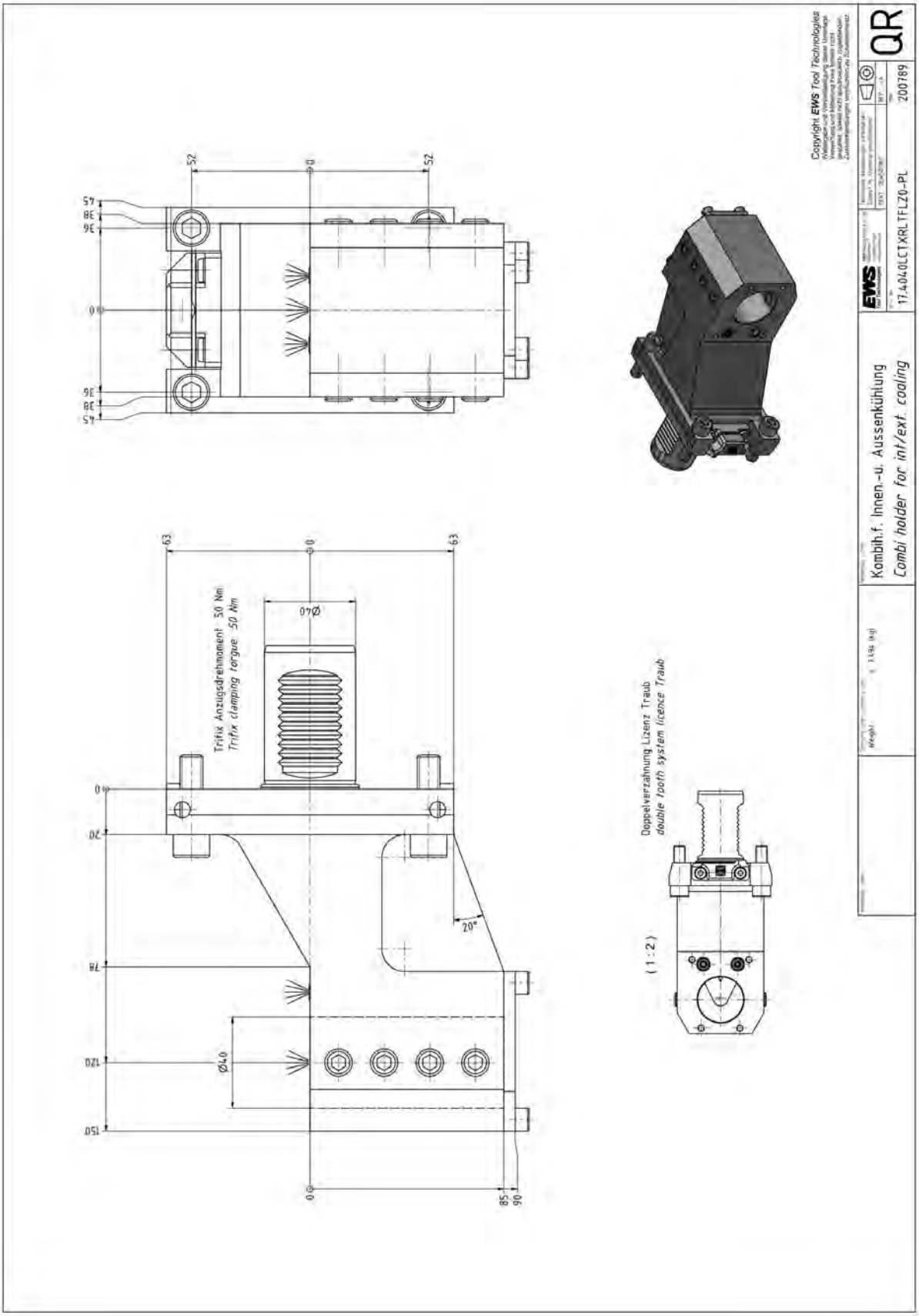

Combi holder for int/ext. cooling

Pos.: 46
MNR: 176286
KTXT: 17.4040LCTXRLTFRZ0-PL

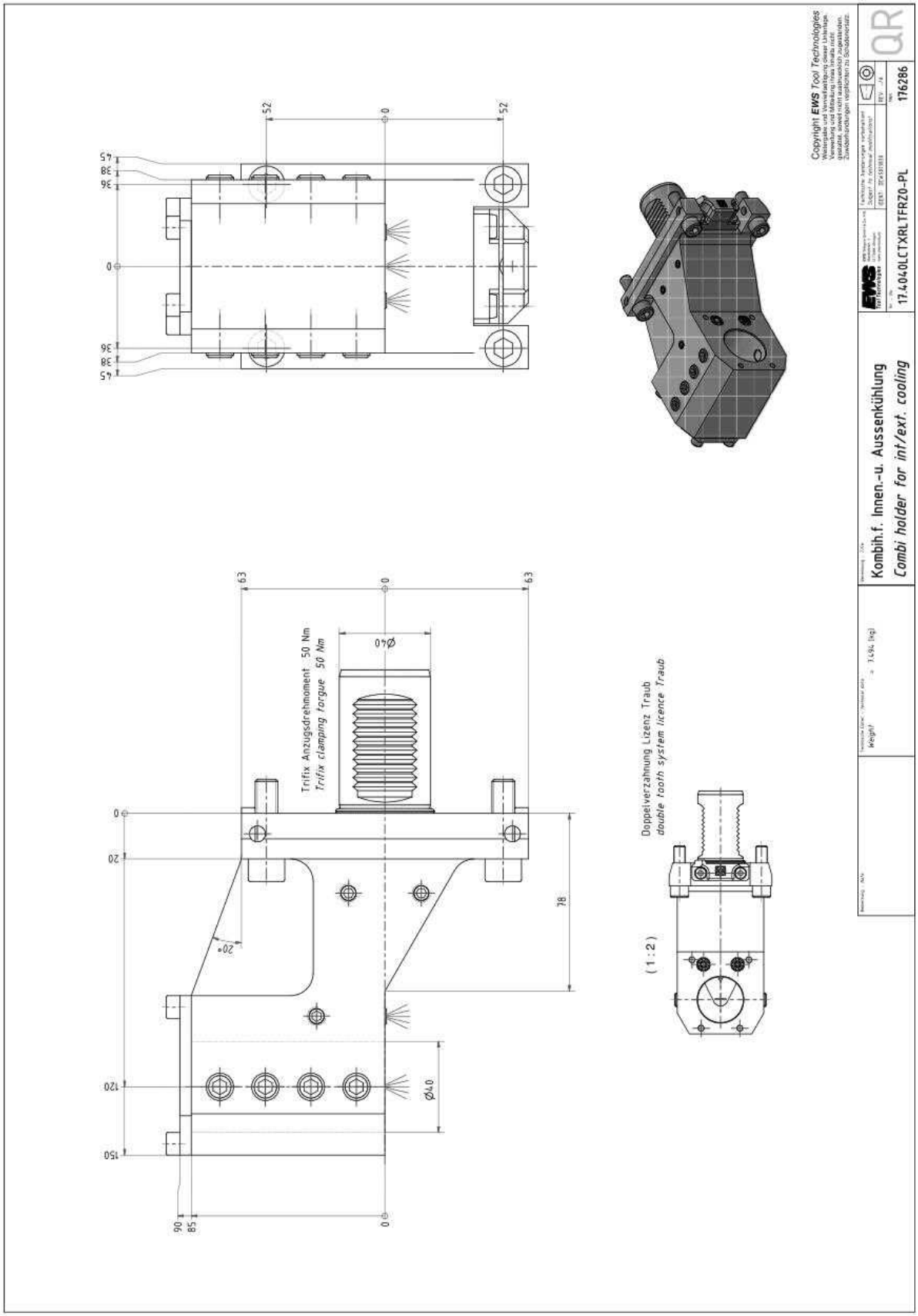

Combi holder for int/ext. cooling

Pos.: 47
MNR: 195732
KTXT: 17.4040LDCTXZ10/Z-100-PL

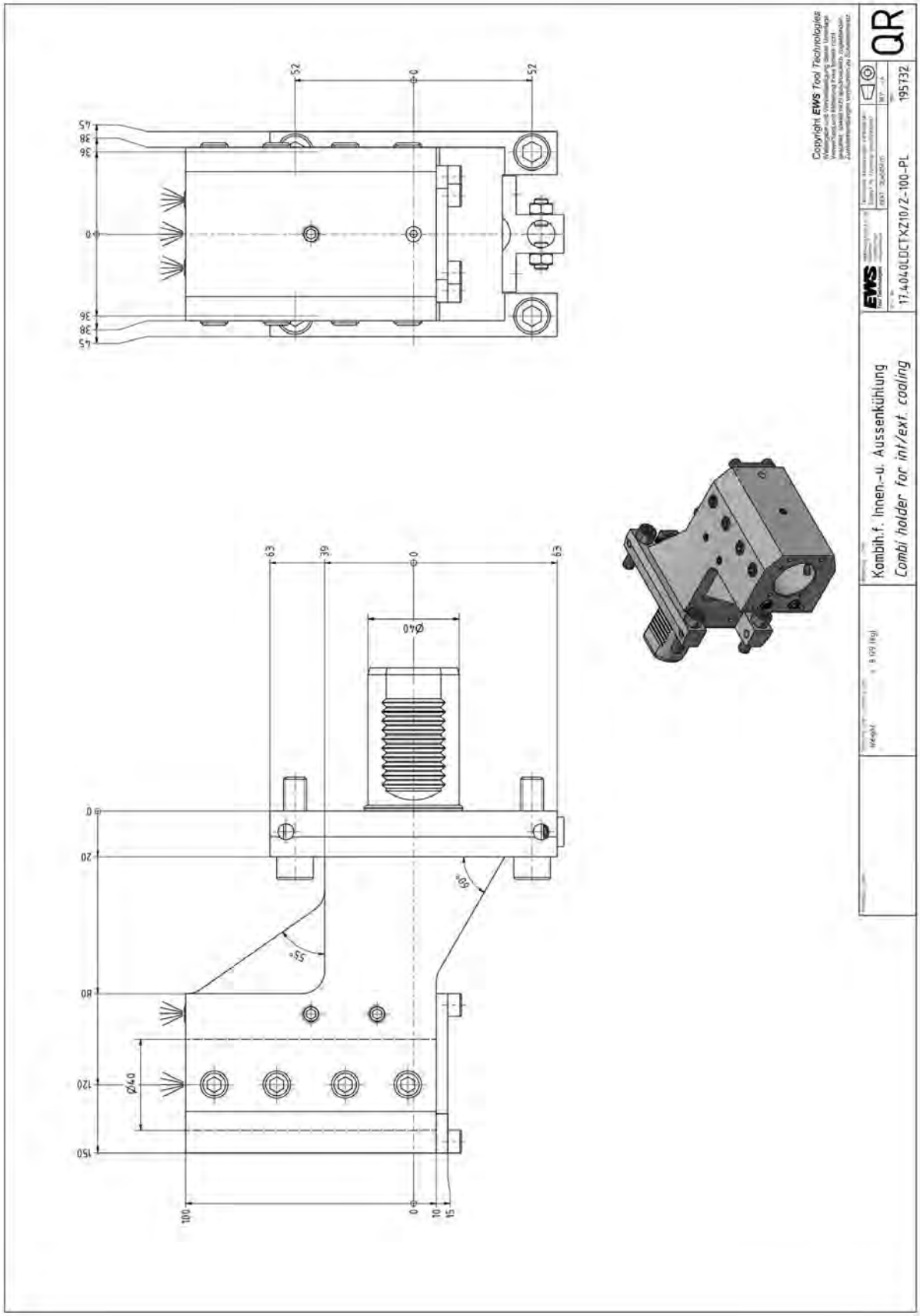

Combi holder for int/ext. cooling

Pos.: 48
MNR: 179358
KTXT: 17.4040DCTXX93X142

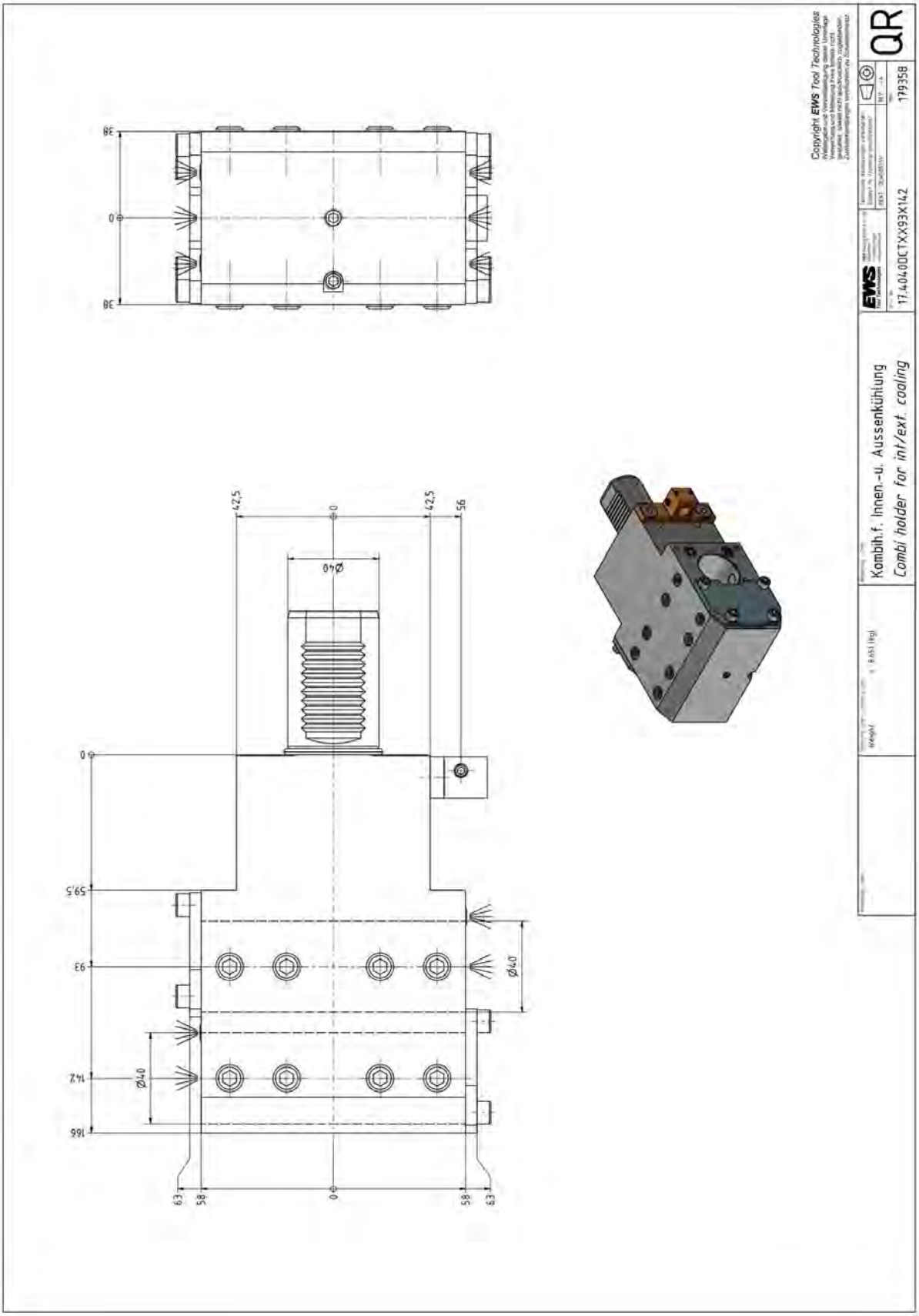

Combi holder for int/ext. cooling

Pos.: 49
MNR: 219582
KTXT: 17.4040QYLCTXRLZ30Z80-PL

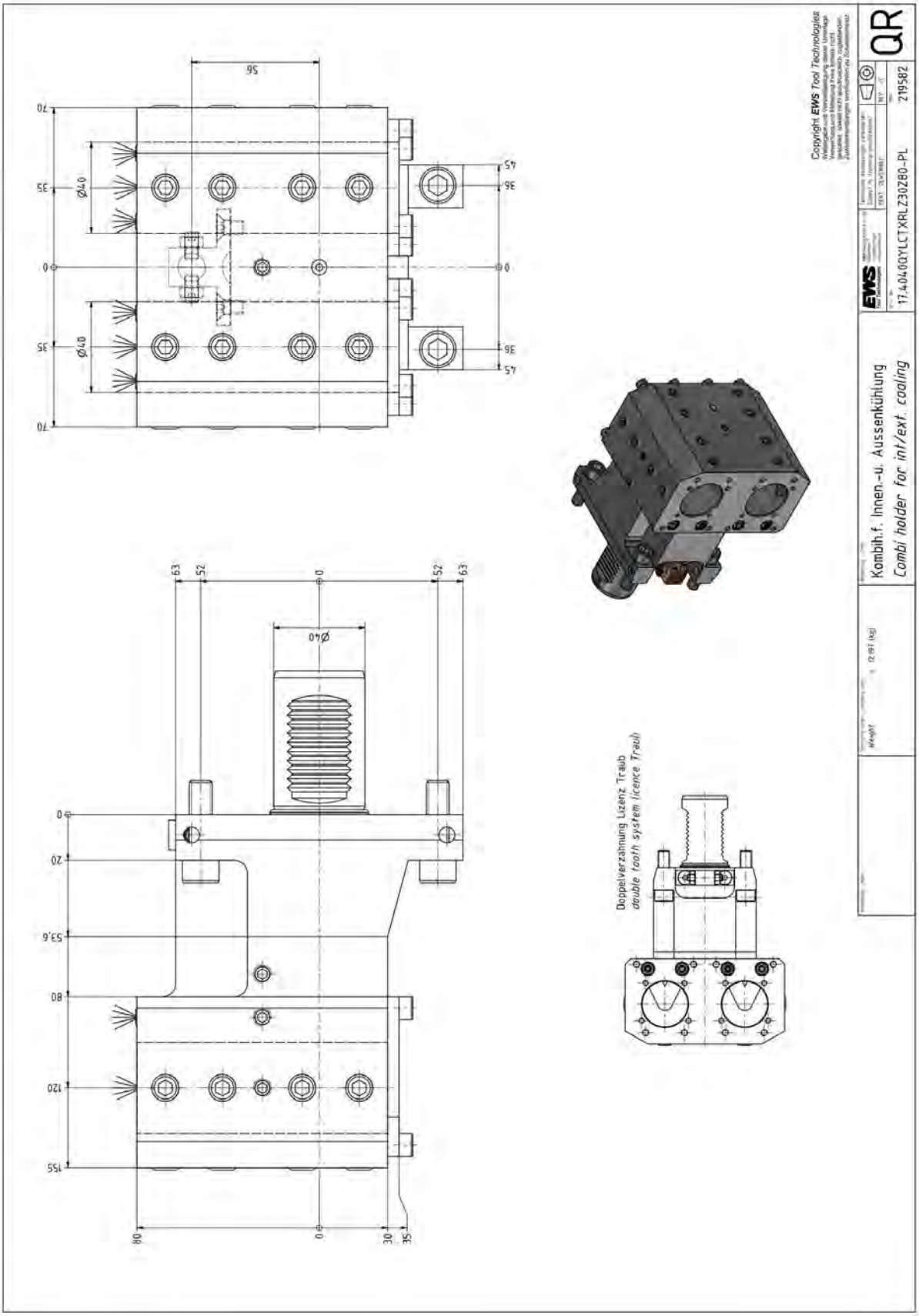

Reducing sleeve

Pos.: 402
MNR: 136376
KTXT: 28.4006S

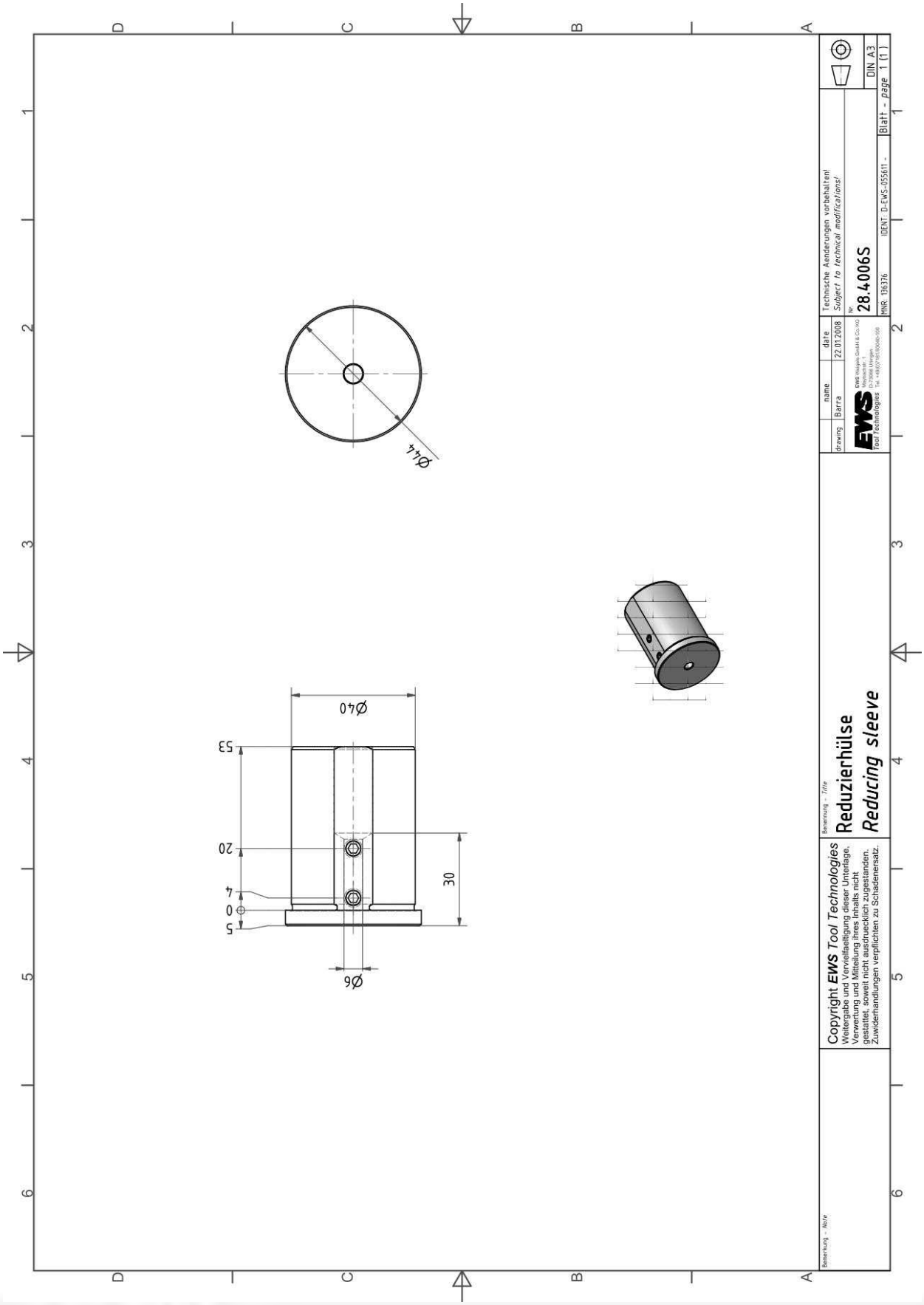

Reducing sleeve

Pos.: 403
MNR: 136377
KTXT: 28.4008S

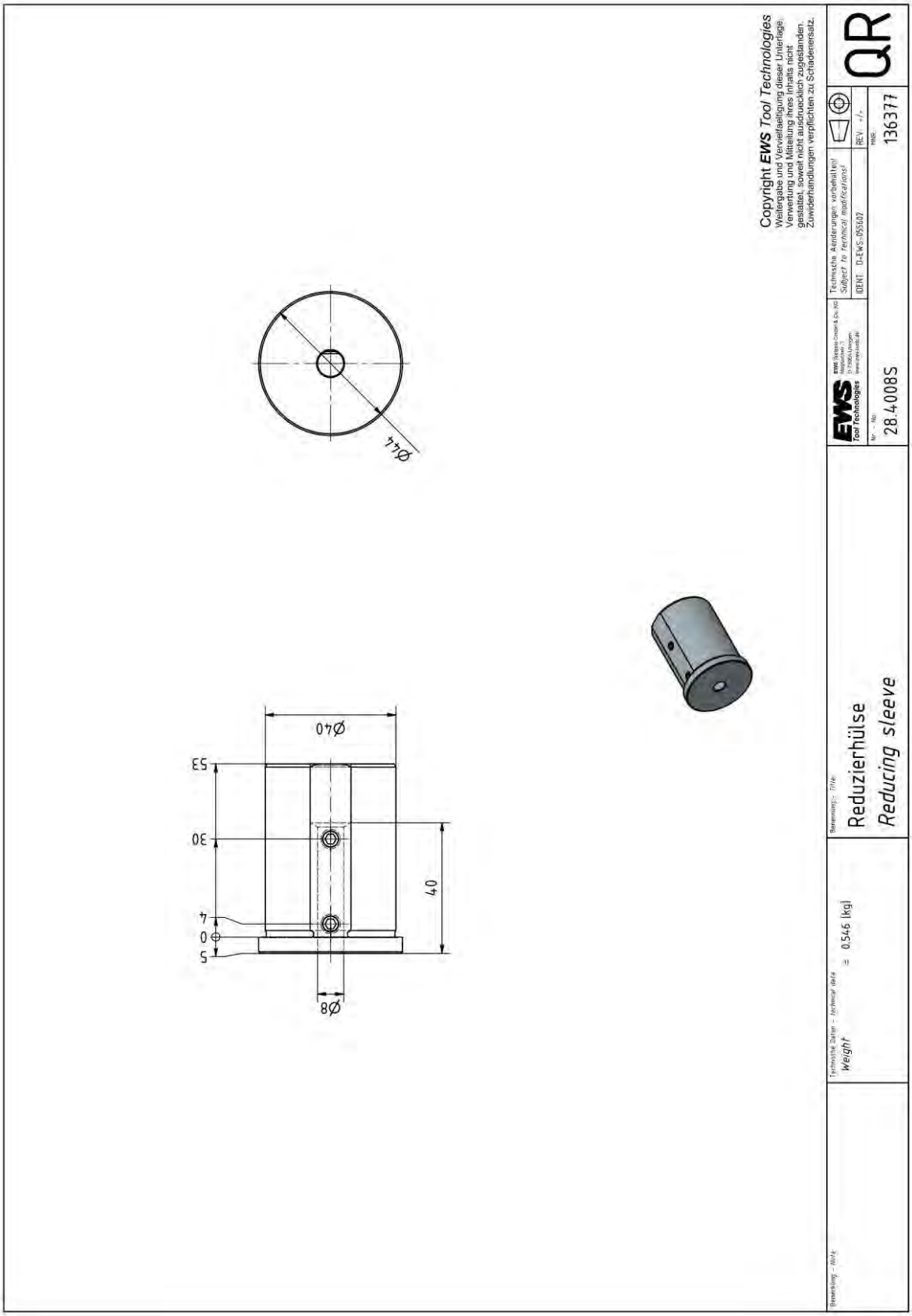

Reducing sleeve

Pos.: 404
MNR: 136378
KTXT: 28.4010S

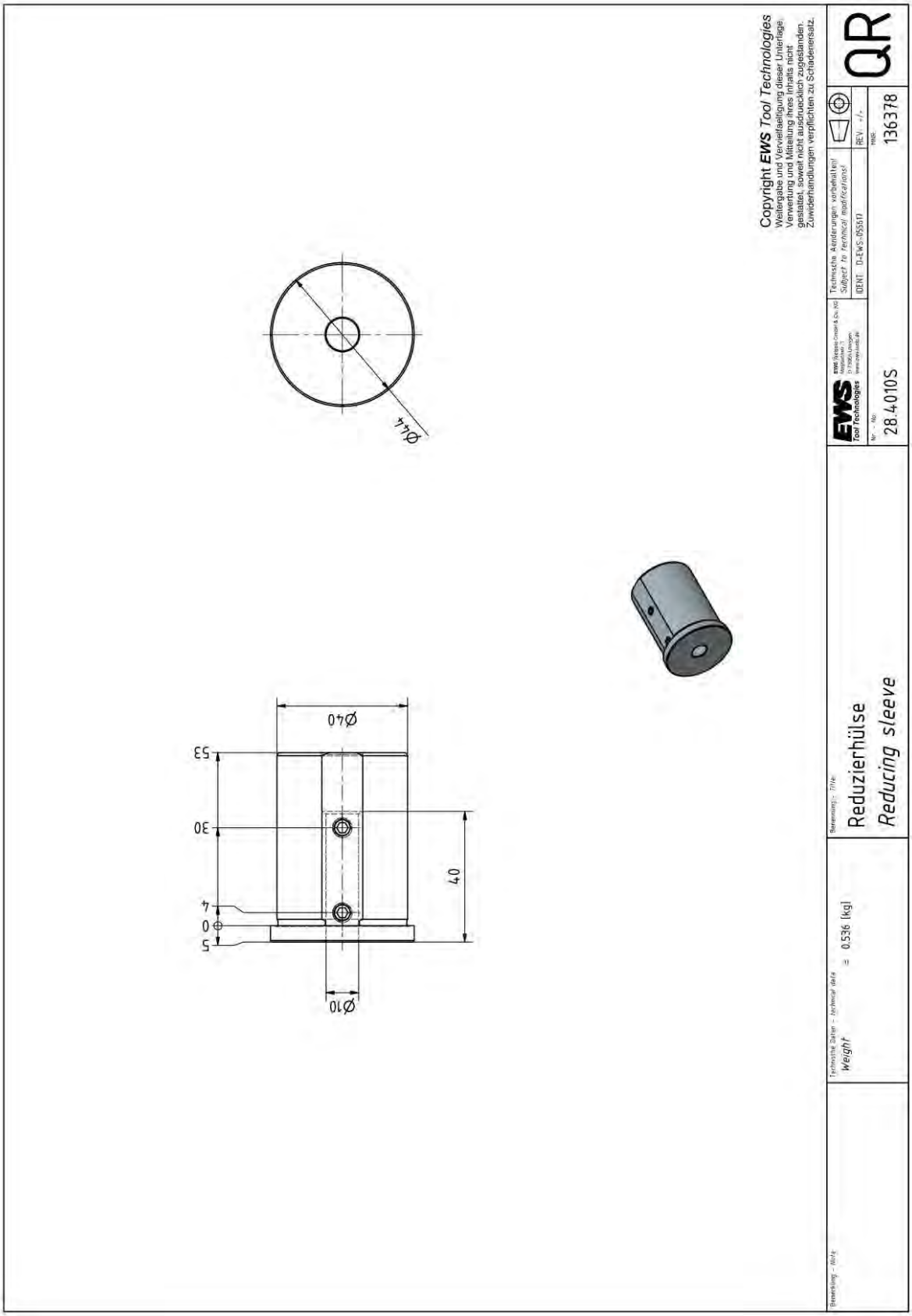

Reducing sleeve

Pos.: 405
MNR: 136379
KTXT: 28.4012S

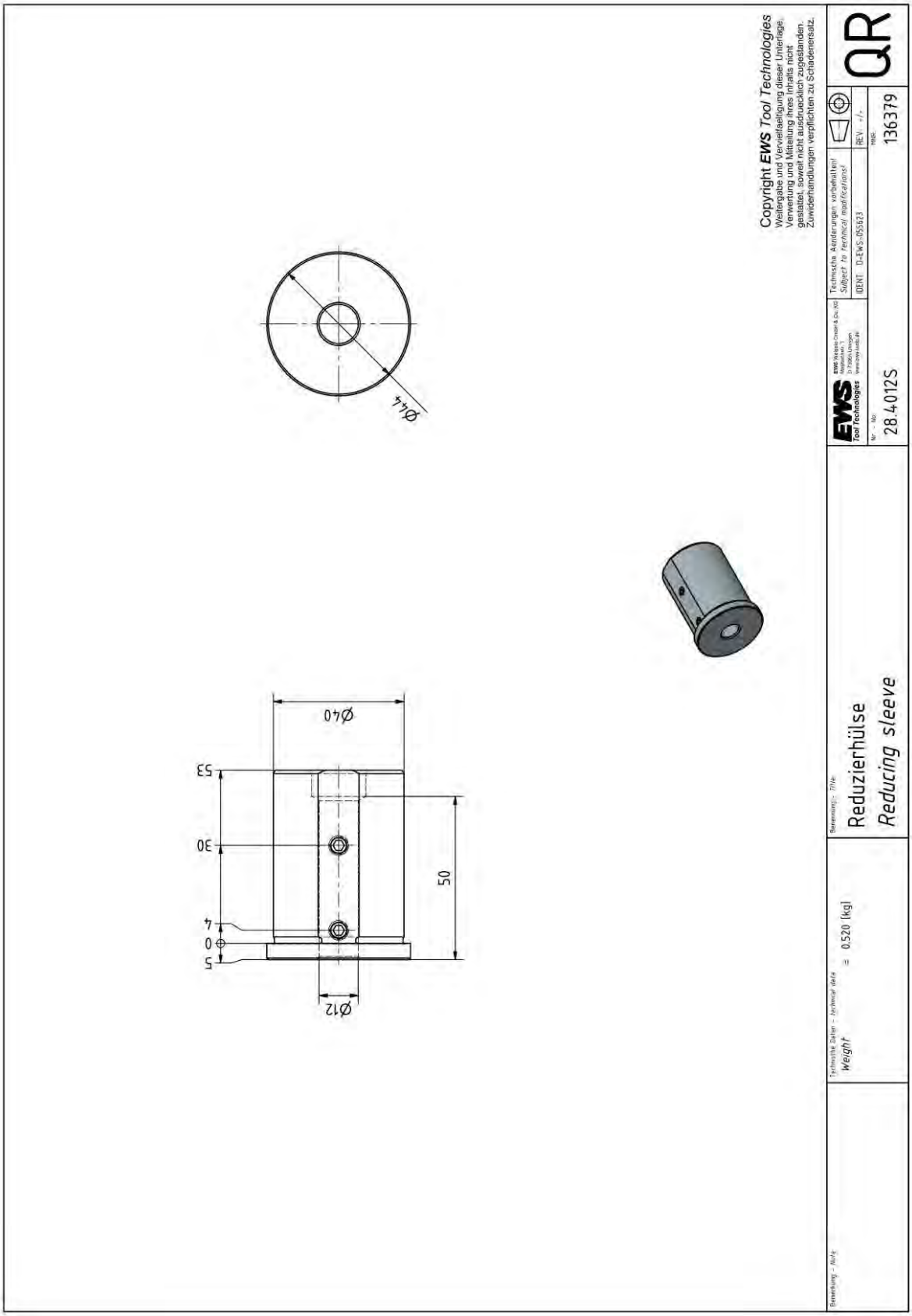

Reducing sleeve

Pos.: 406
MNR: 136381
KTXT: 28.4016S

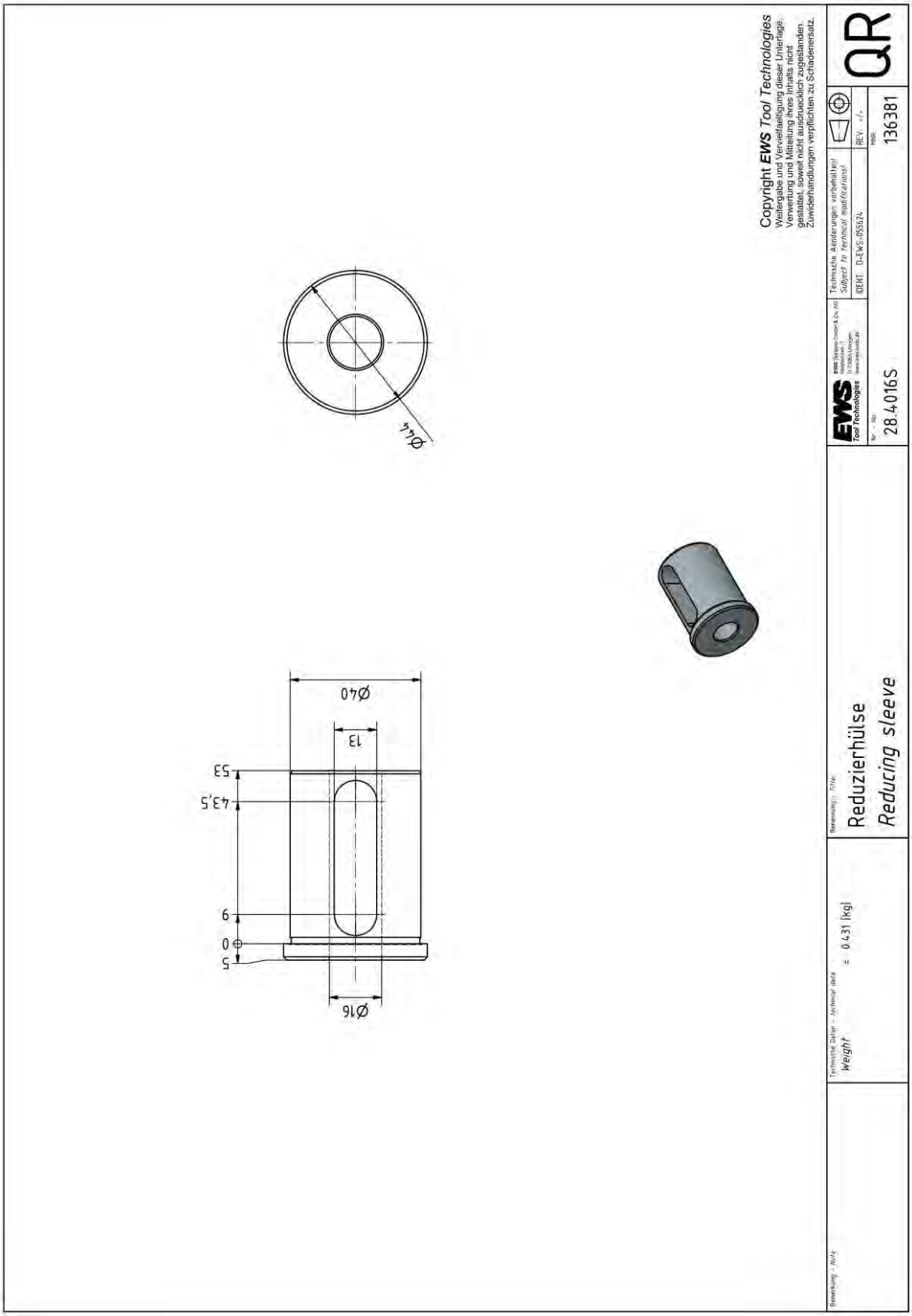

Reducing sleeve

Pos.: 407
MNR: 136384
KTXT: 28.4020S

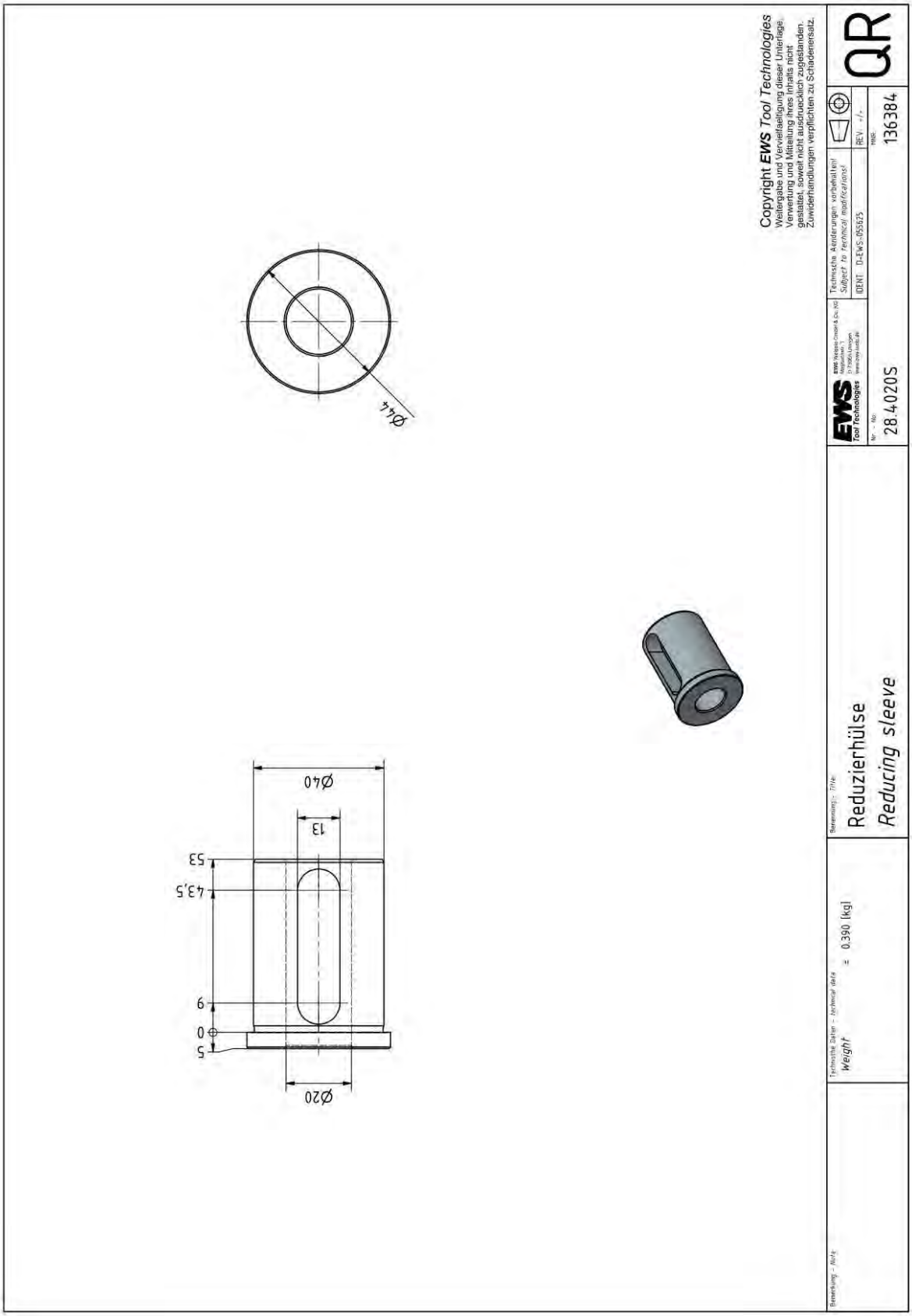

Reducing sleeve

Pos.: 408
MNR: 136385
KTXT: 28.4025S

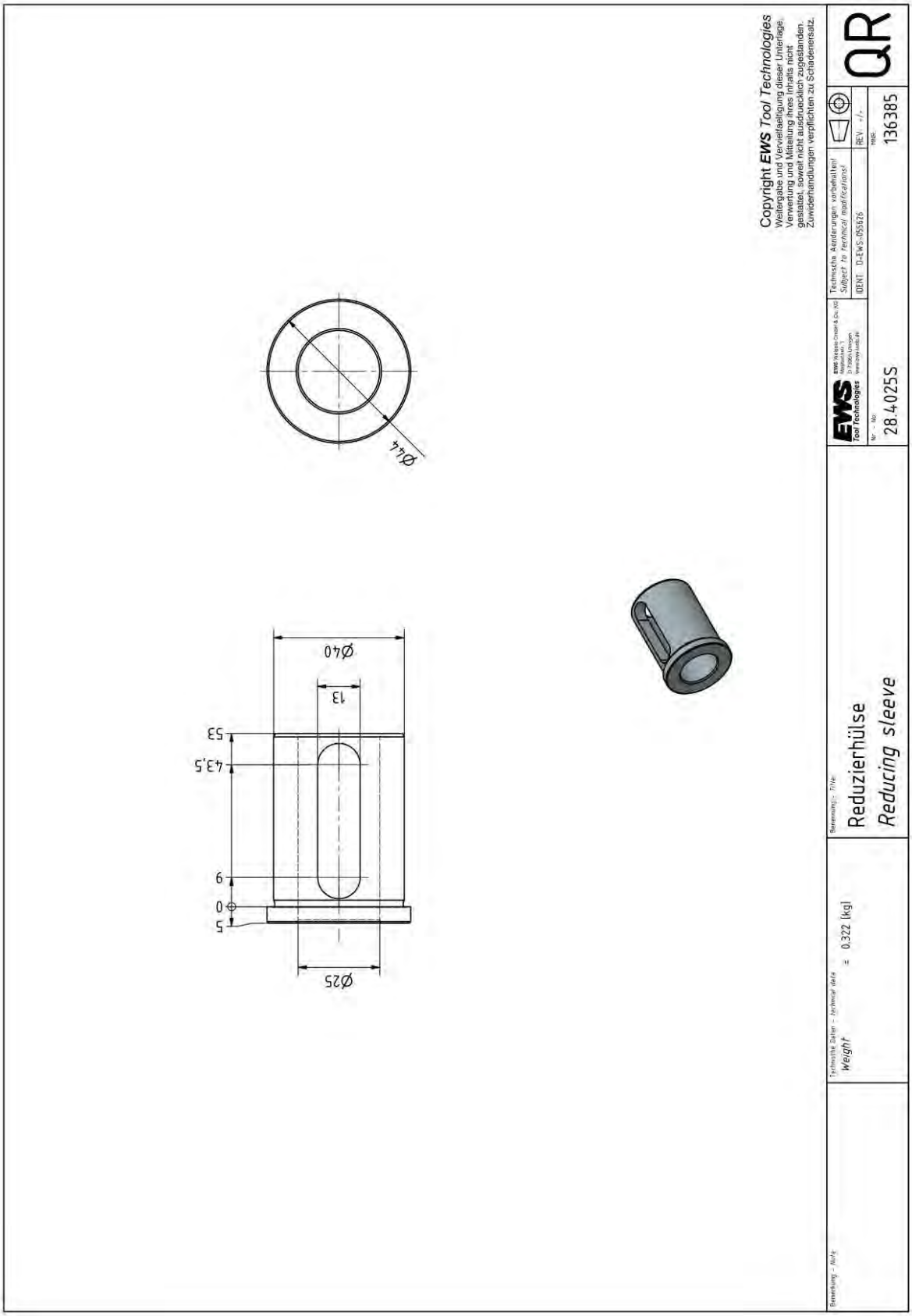

Reducing sleeve

Pos.: 409
MNR: 136388
KTXT: 28.4032S

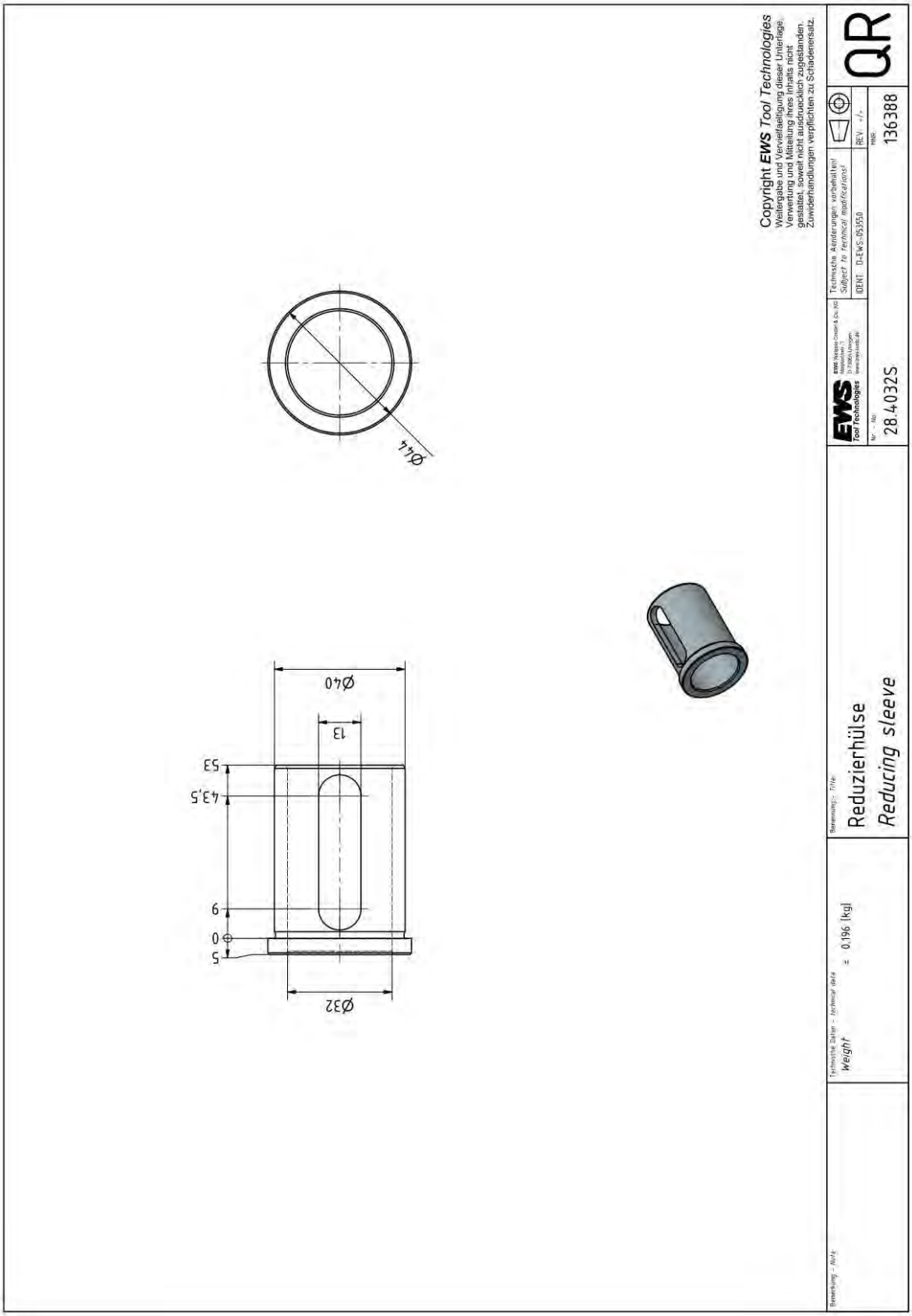

Reducing sleeve

Pos.: 410
MNR: 160321
KTXT: 28.4016S-GEW

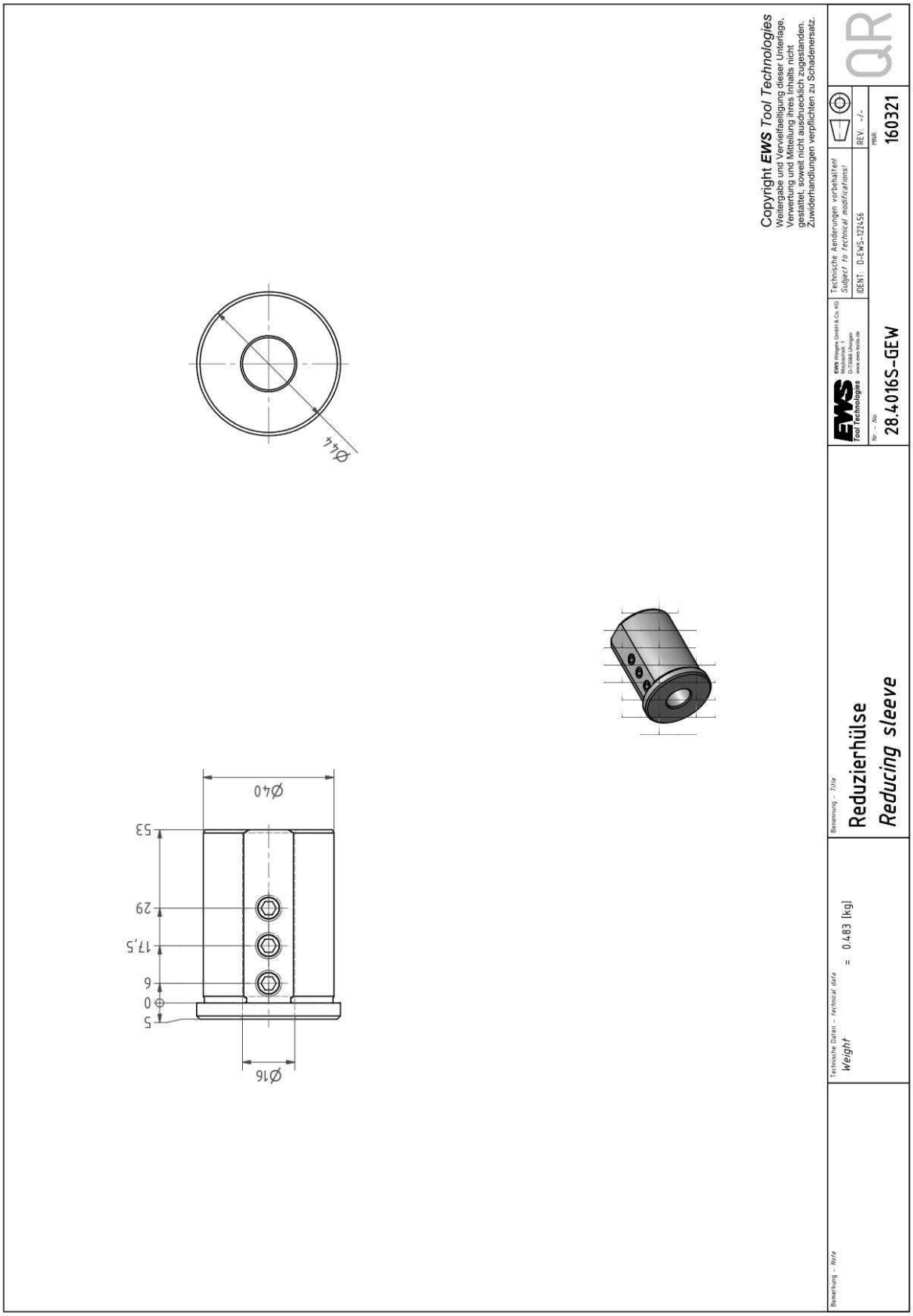

Reducing sleeve

Pos.: 411
MNR: S04009
KTXT: 28.4020S-GEW

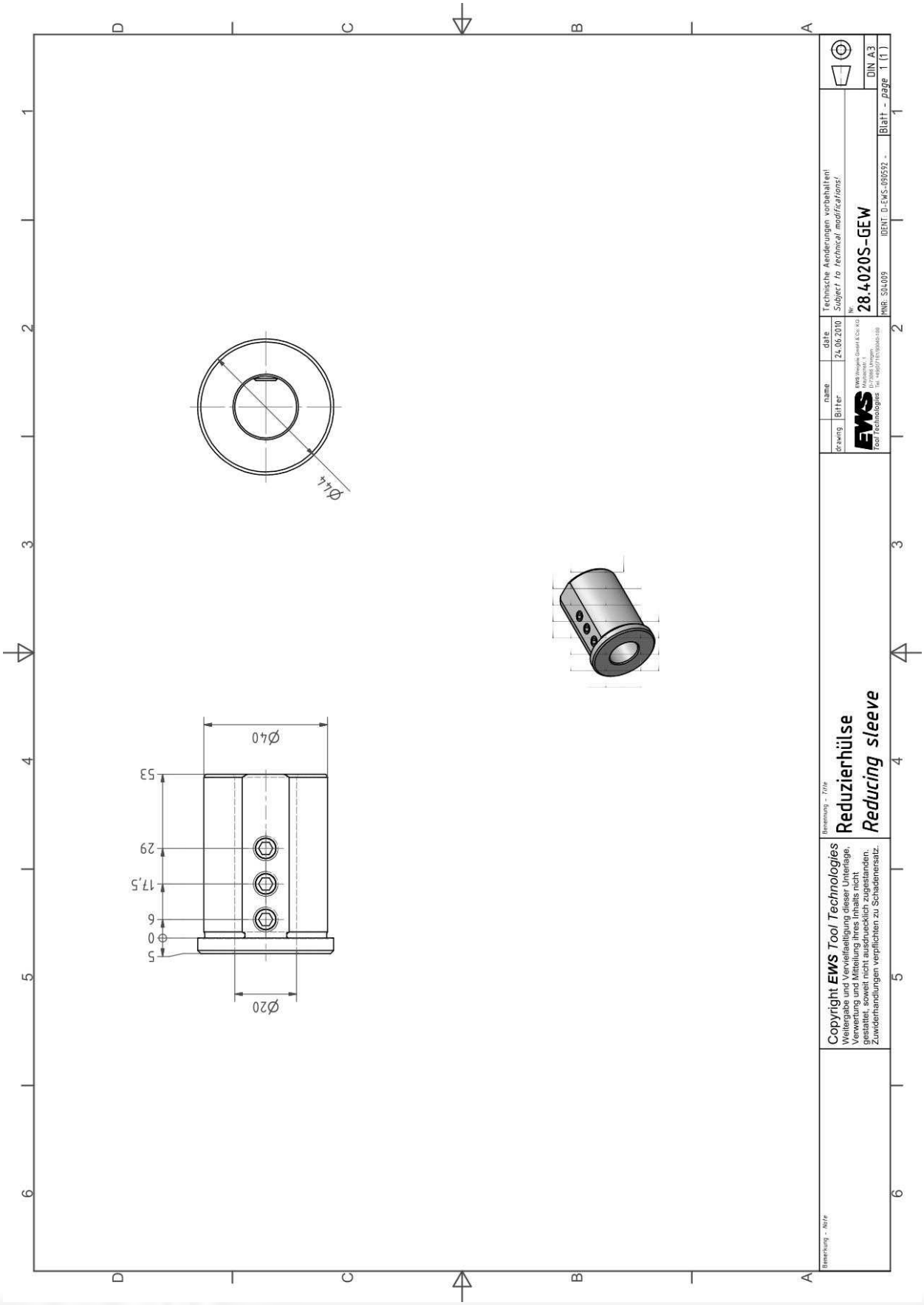

Reducing sleeve

Pos.: 412
MNR: 163928
KTXT: 28.4025S-GEW

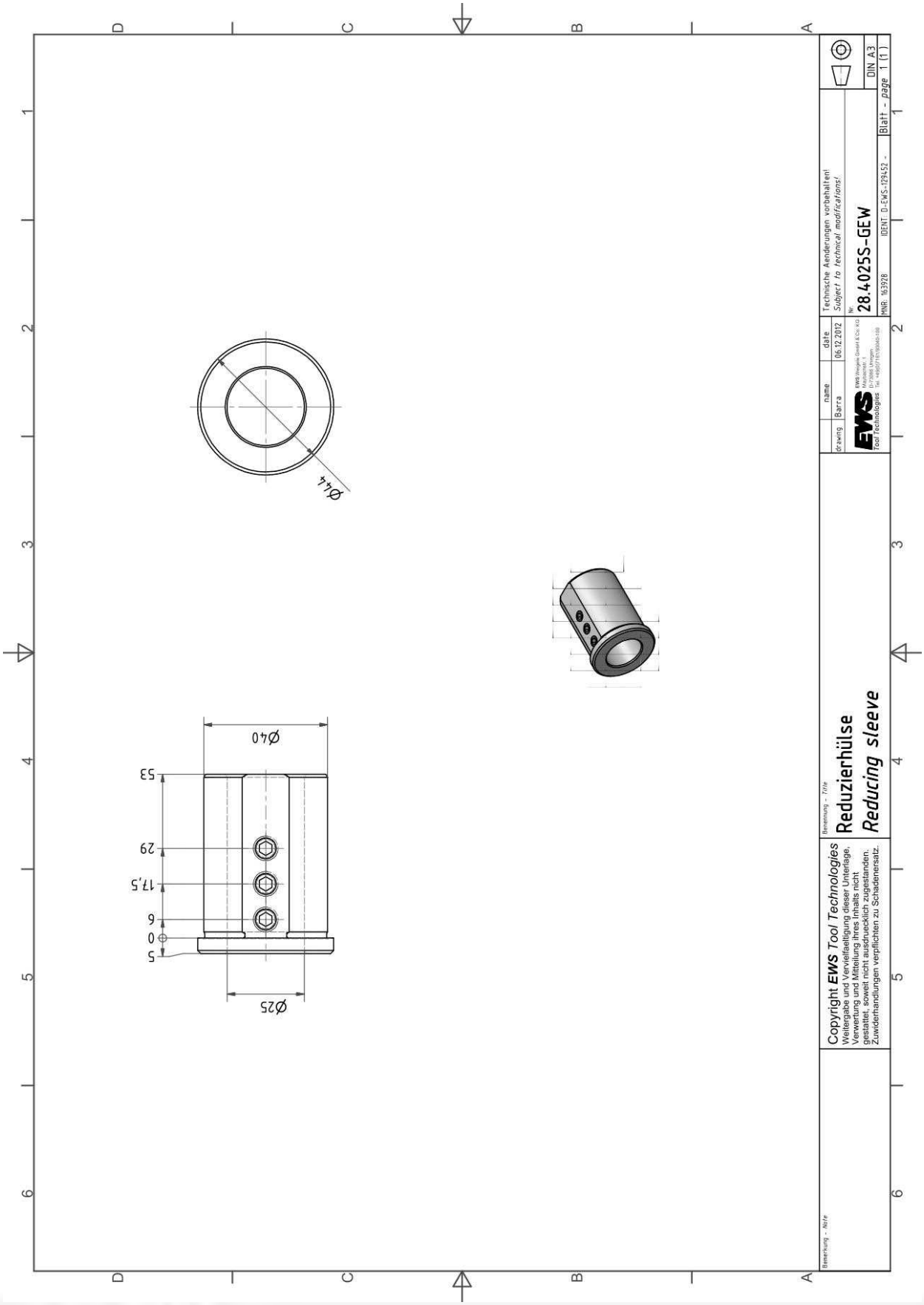

Combi holder for int/ext. cooling

Pos.: 50
MNR: 173816
KTXT: 17.40VX4LDCTXTF

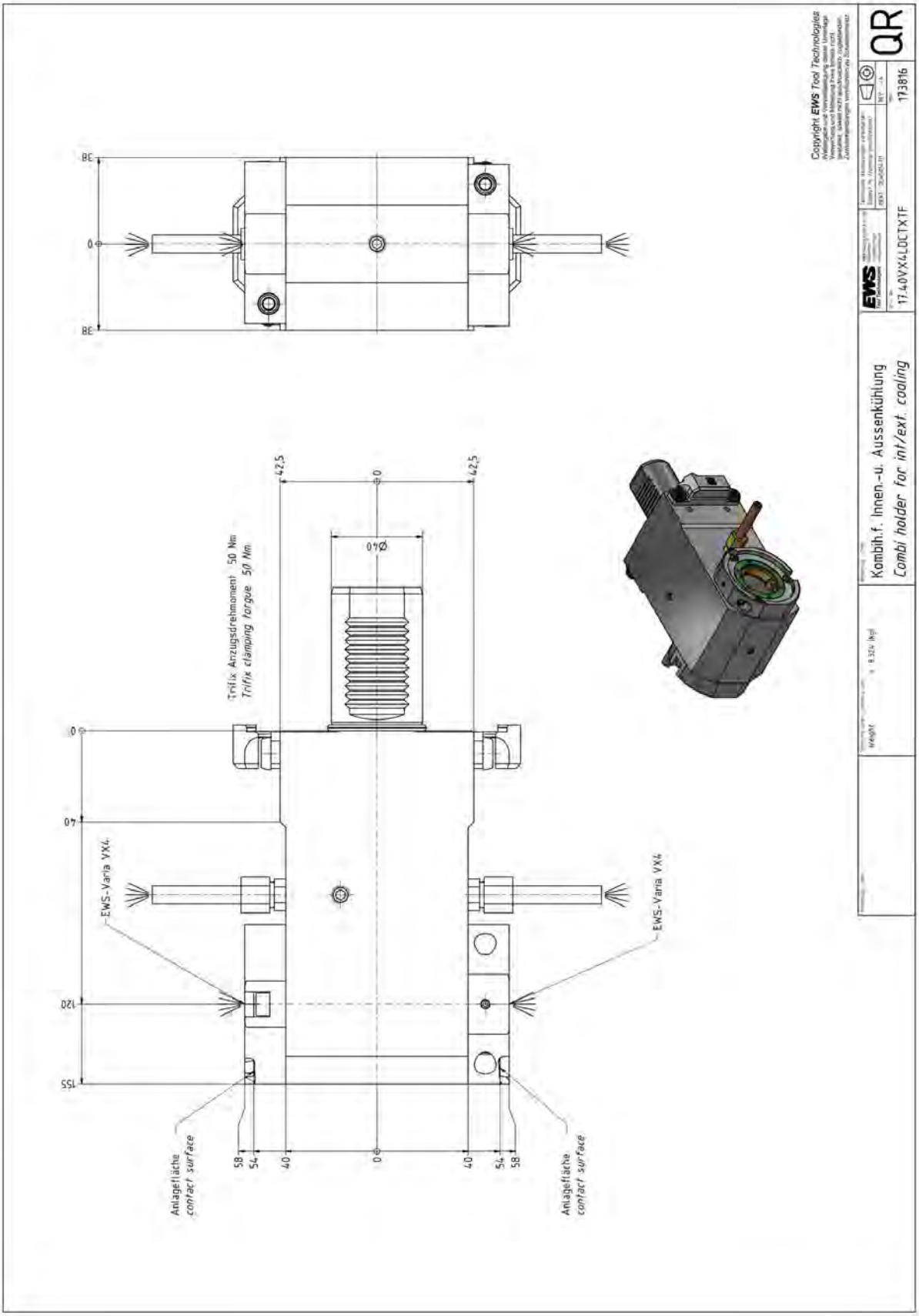

Combi holder for int/ext. cooling

Pos.: 51
MNR: 206383
KTXT: 17.40VX4LDCTXTF-PL

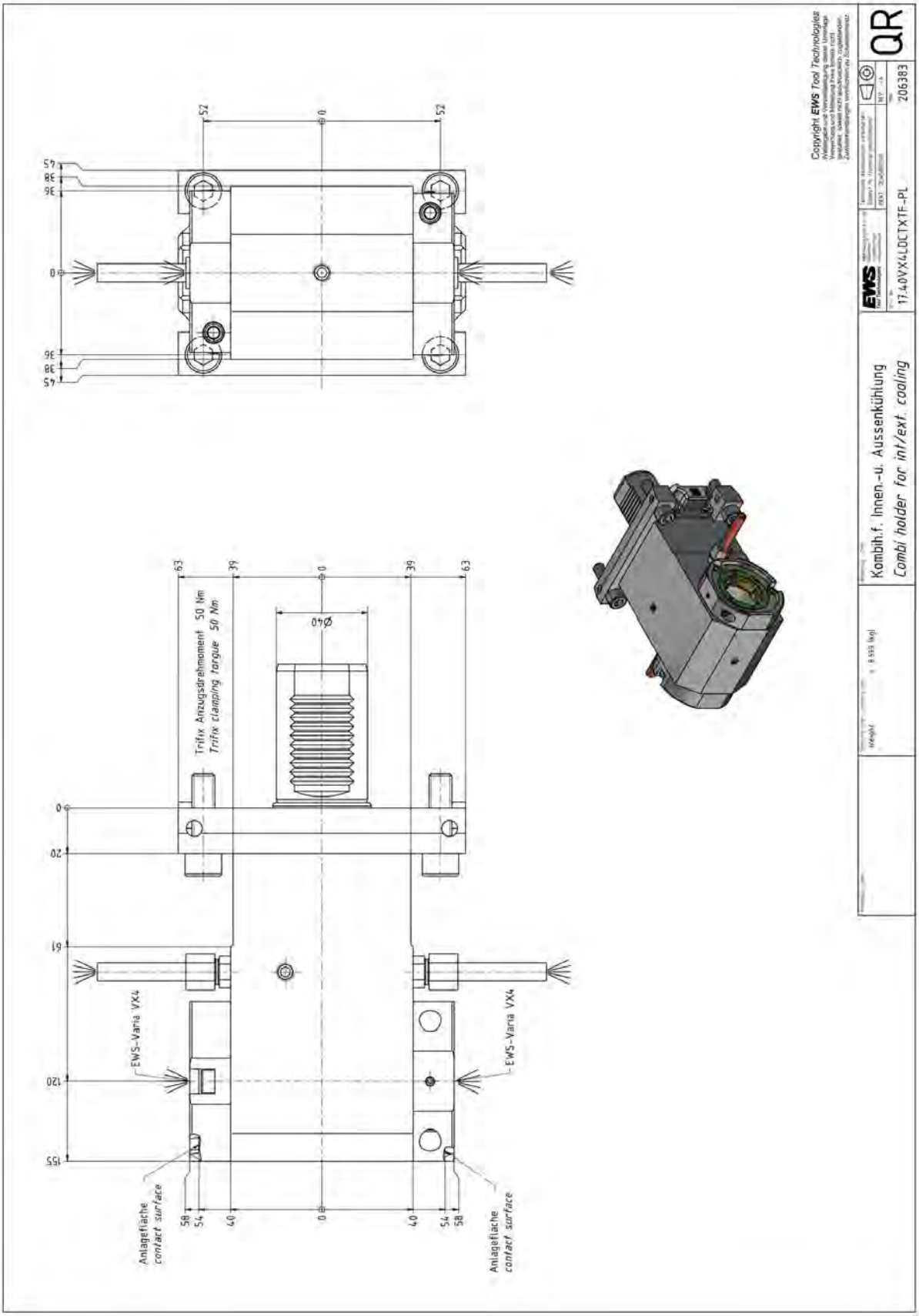

Boring bar holder

Pos.: 52
MNR: 209239
KTXT: 19.40VX4-ZYL

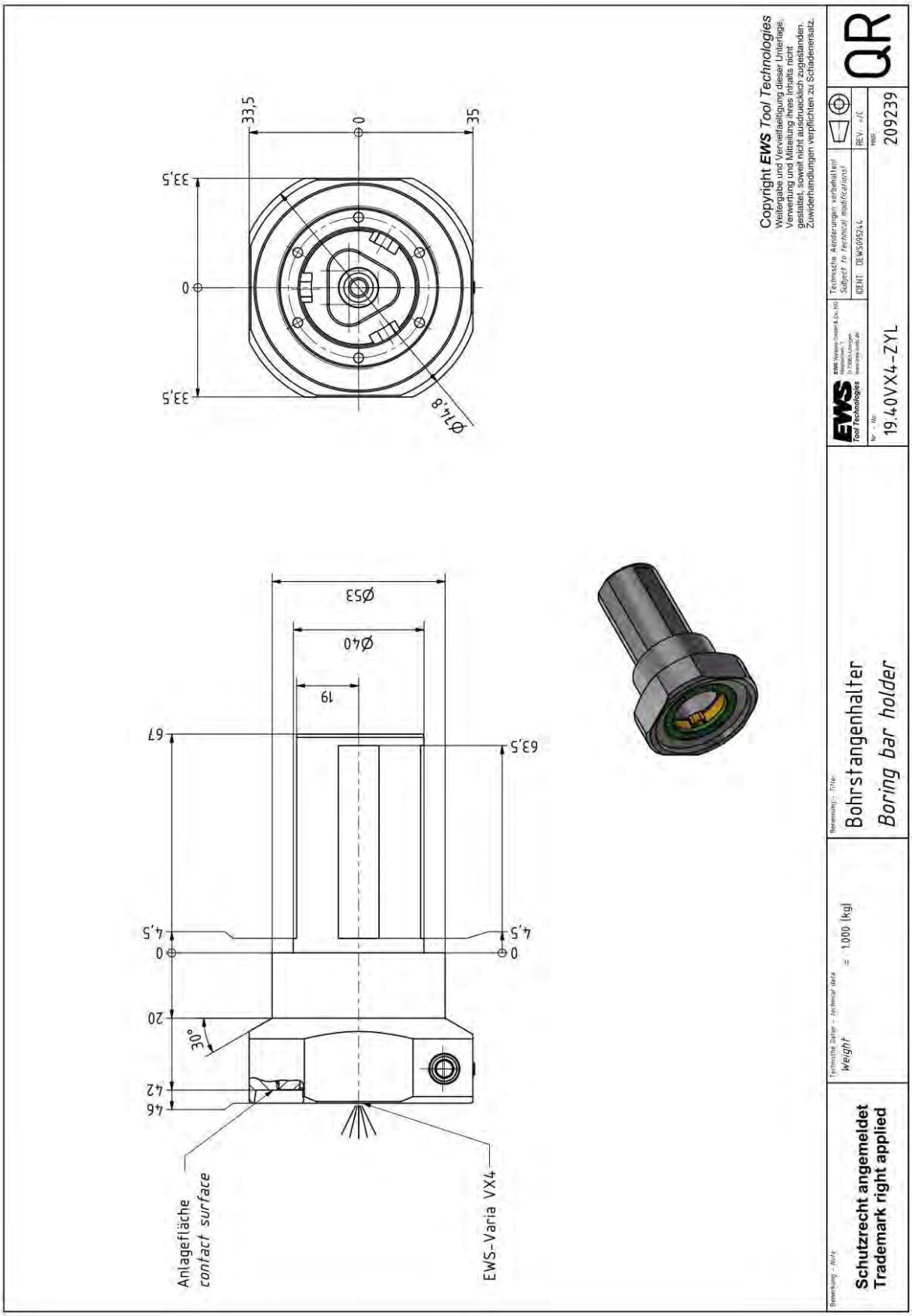

Axial drilling and milling head

Pos.: 60
MNR: 194843
KTXT: 40.40VX4CTXIKC

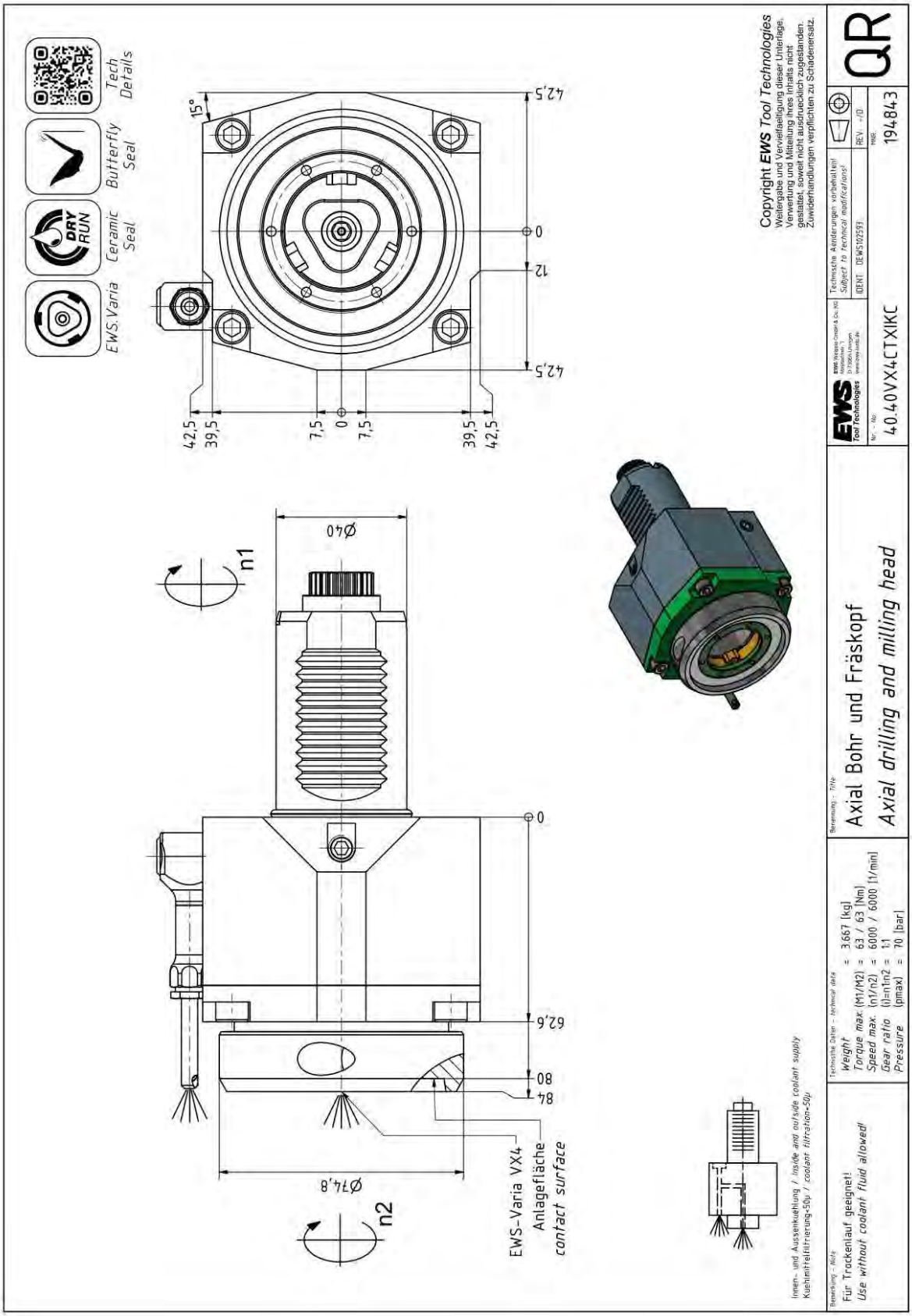

Axial drilling and milling head

Pos.: 61
MNR: 158496
KTXT: 40.40VX4CTX

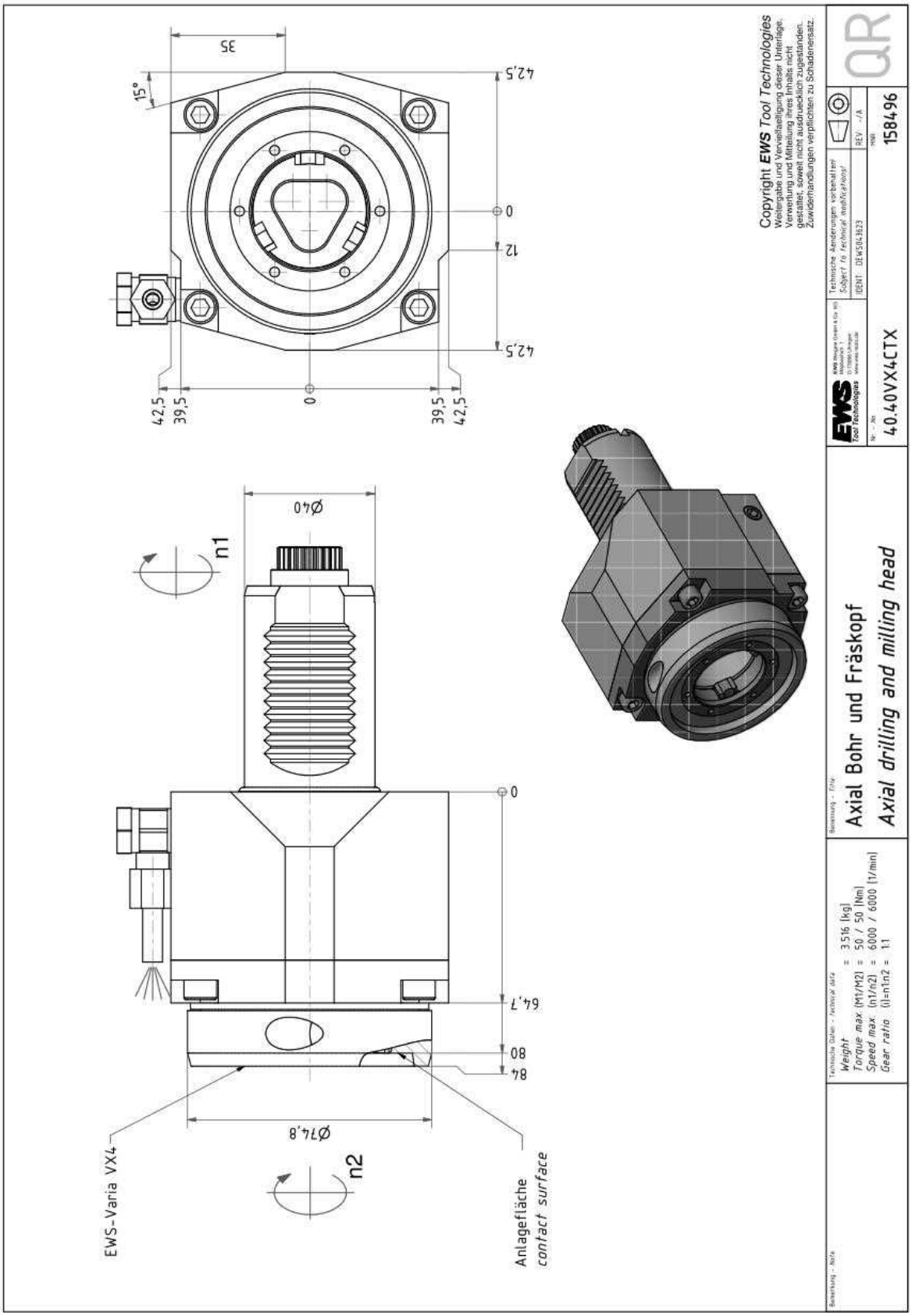

Axial drilling and milling head

Pos.: 62
MNR: 164157
KTXT: 40.40VX4KRCTX

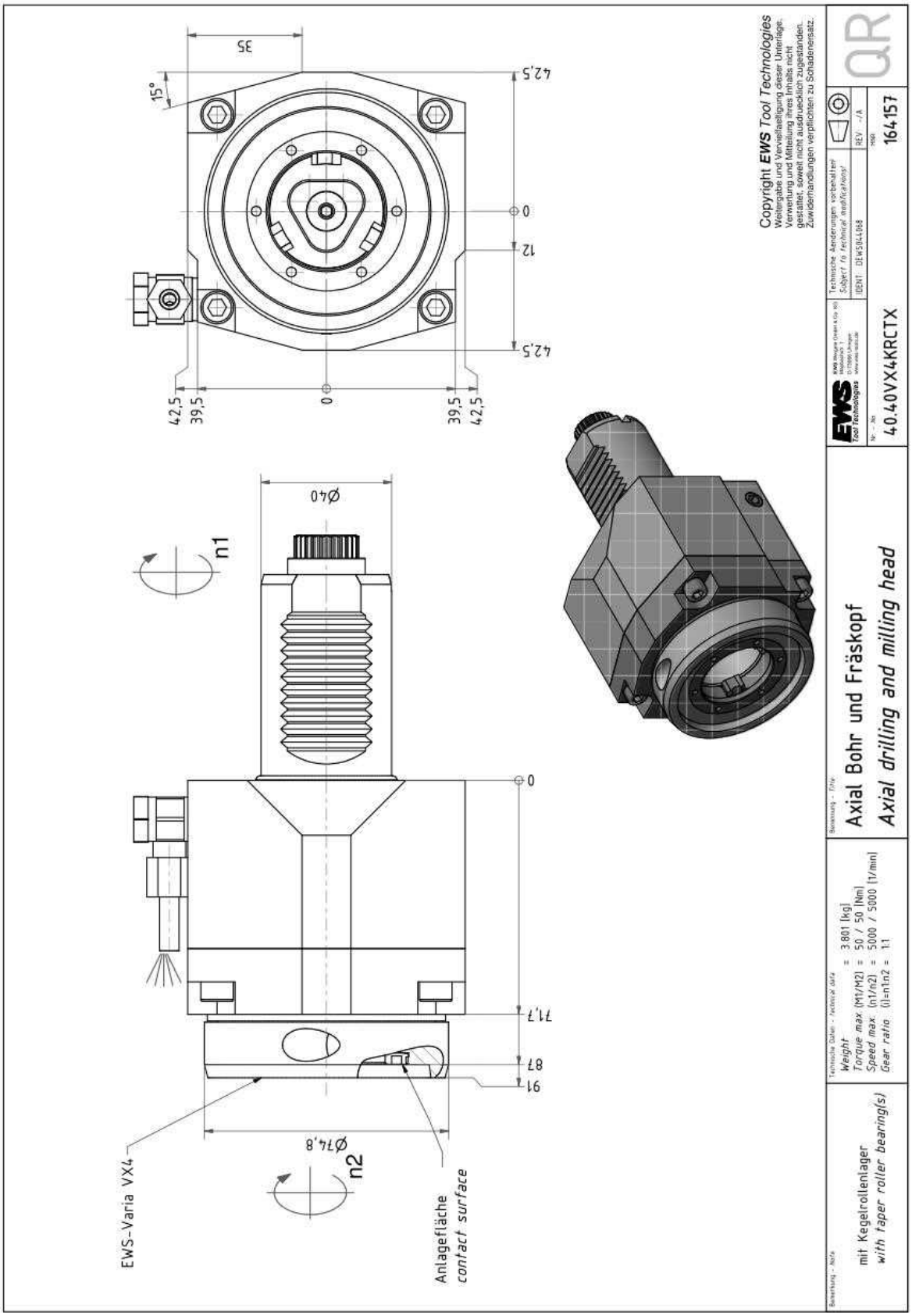

Radial drilling and milling head

Pos.: 63
MNR: 216416
KTXT: 60.40VX4LCTXRLIKD-CC4

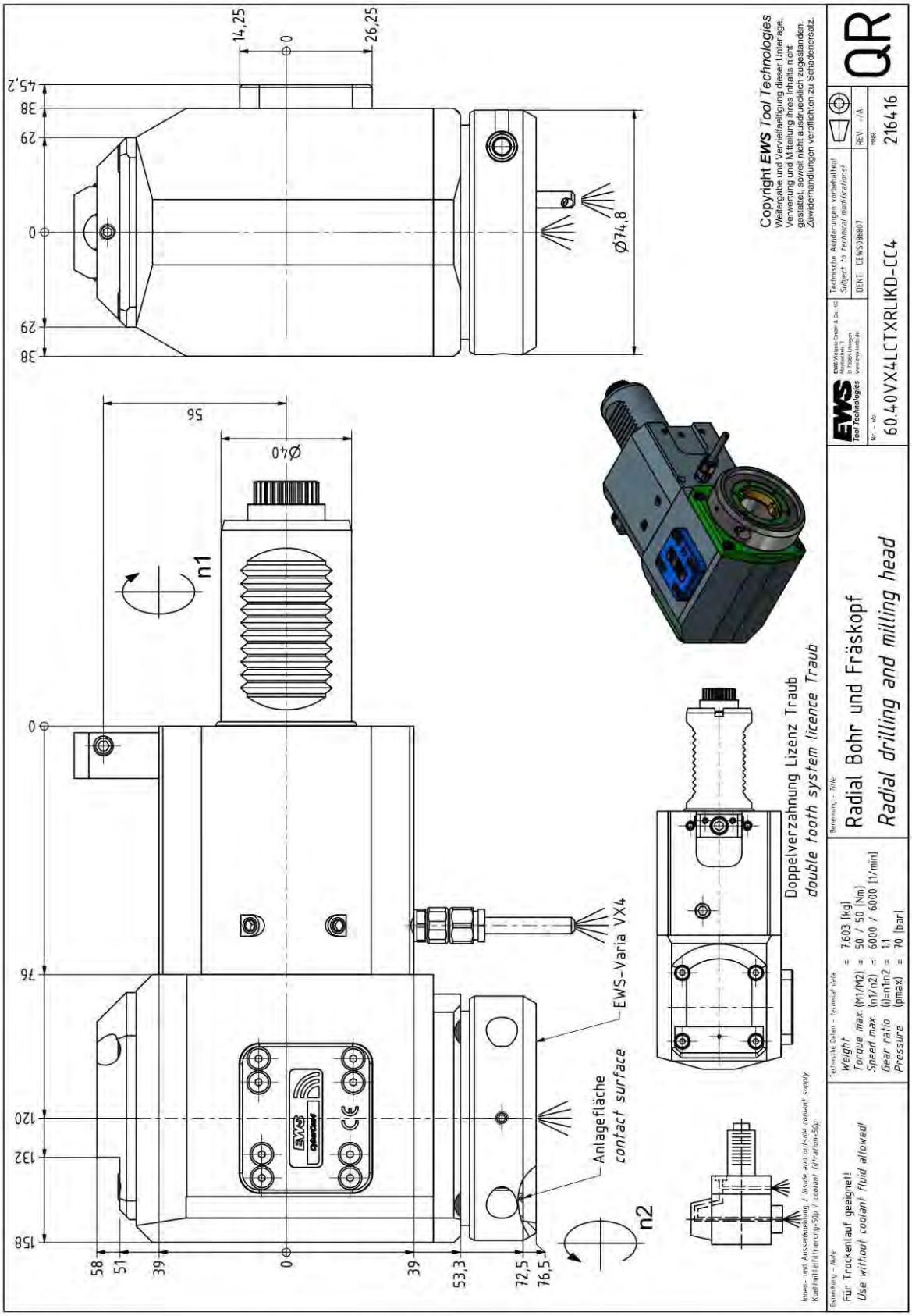

Radial drilling and milling head

Pos.: 68
MNR: 213777
KTXT: 60.40VX4LCTXLIKDTF

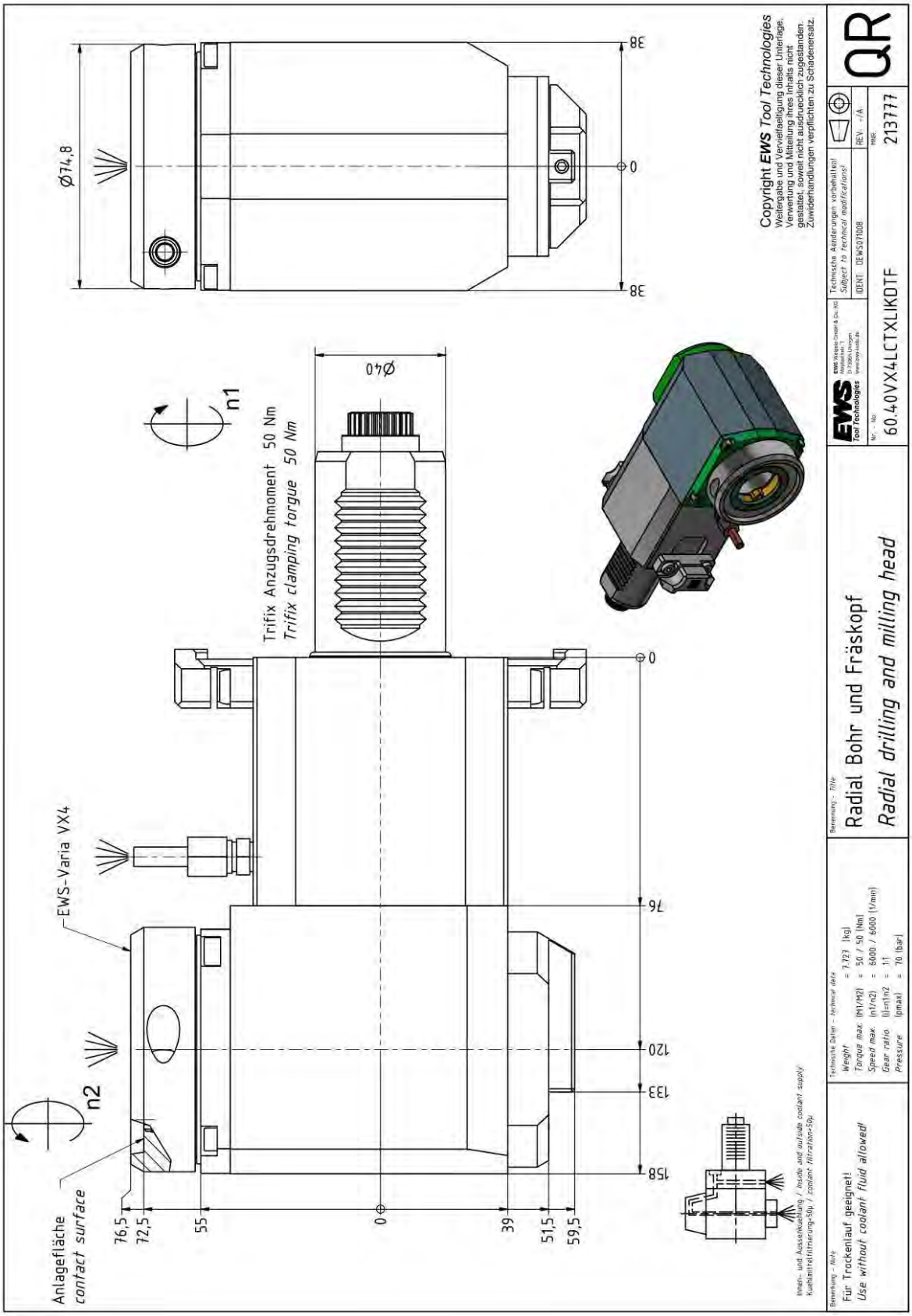

Radial drilling and milling head

Pos.: 69
MNR: 213776
KTXT: 60.40VX4LCTXRIKDTF

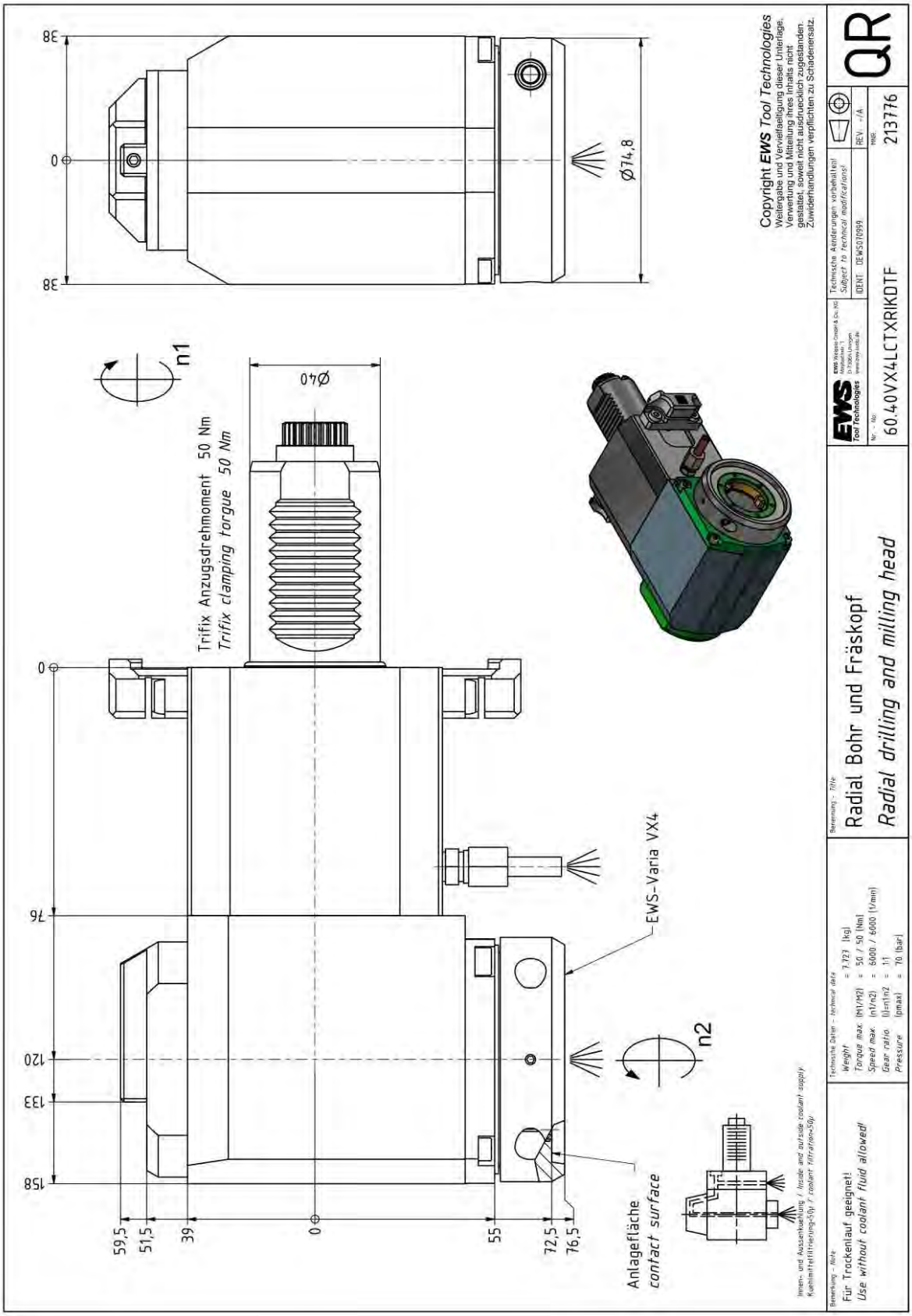

Radial drilling and milling head

Pos.: 70
MNR: 219338
KTXT: 60.40VX4LDCTXRLIKD-PL

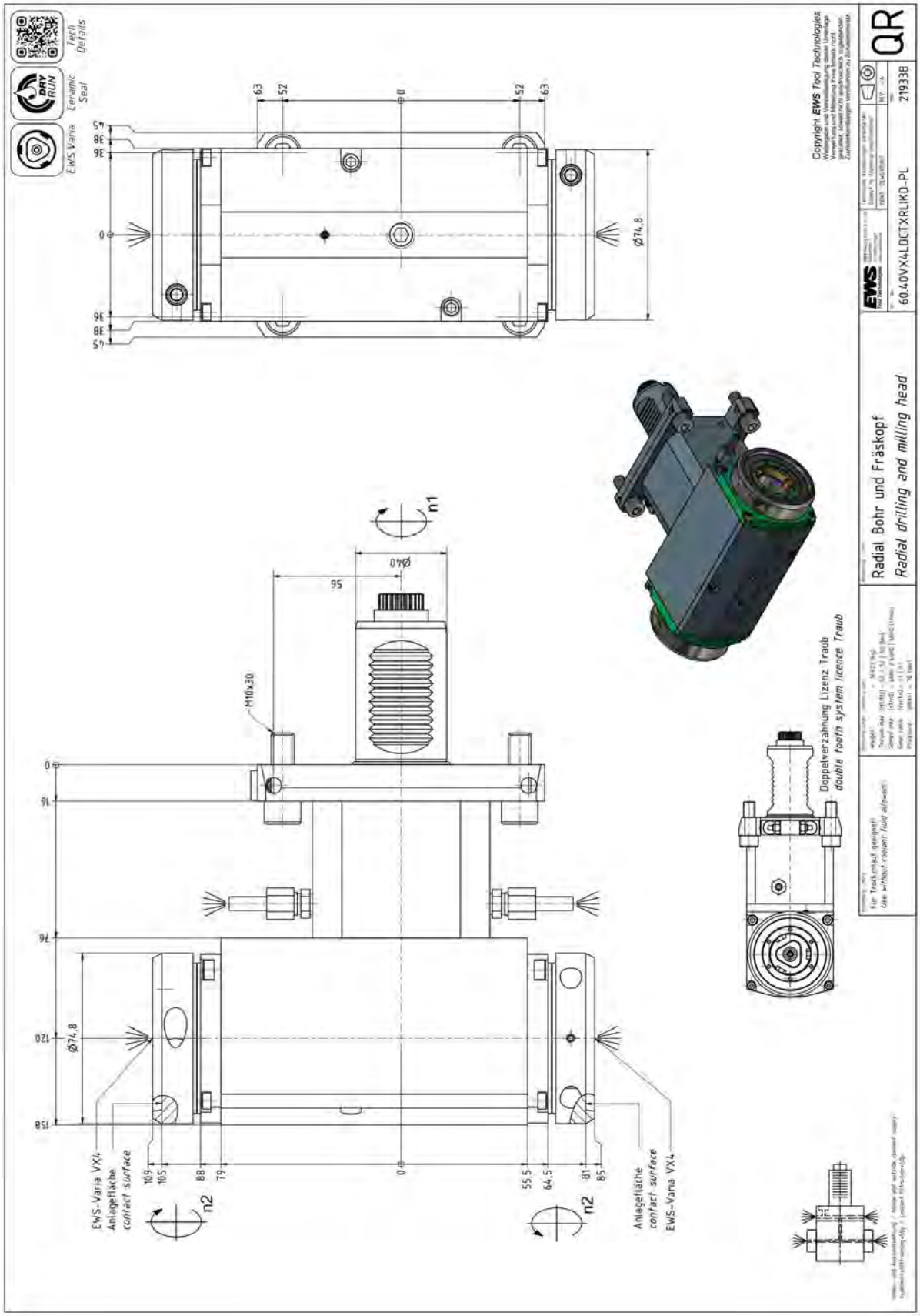

Radial drilling and milling head

Pos.: 71
MNR: 169577
KTXT: 60.40VX4LDCTXRLIKDTFR-PL

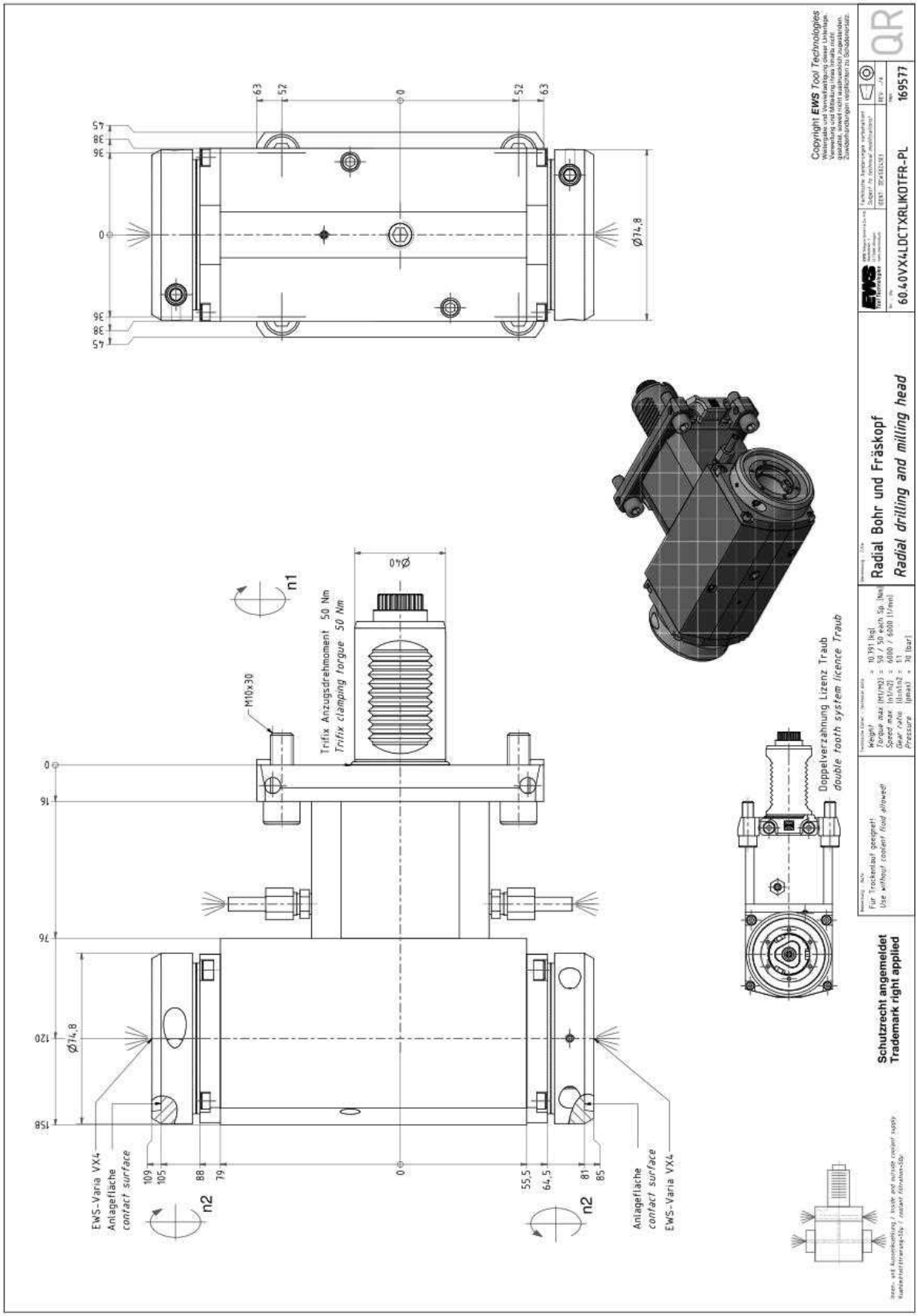

Radial drilling and milling head

Pos.: 74
MNR: 208908
KTXT: 60.40VX3QYCTXTK70

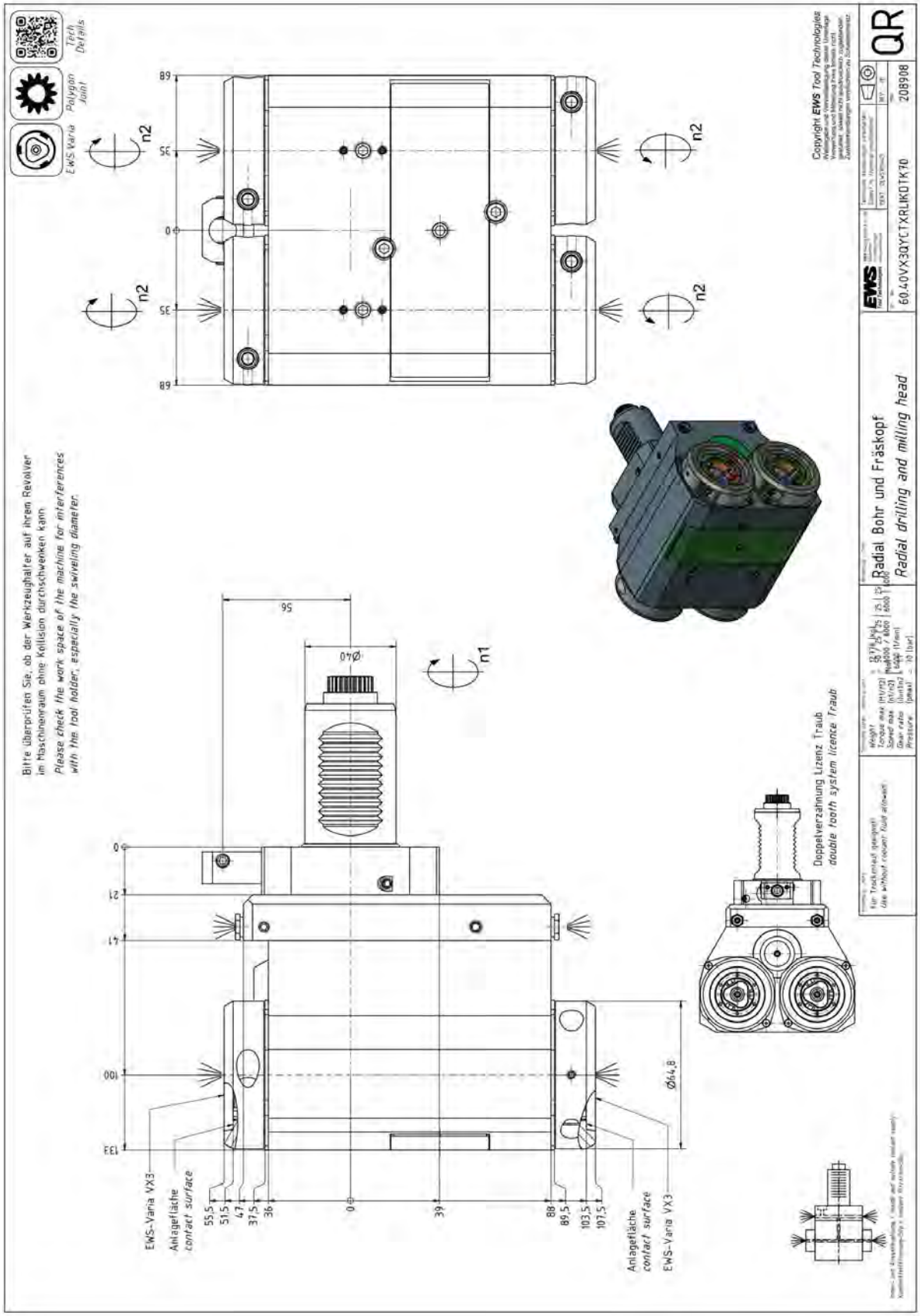

Axial drilling and milling head

Pos.: 80
MNR: 208517
KTXT: 40.4032CTXIKC

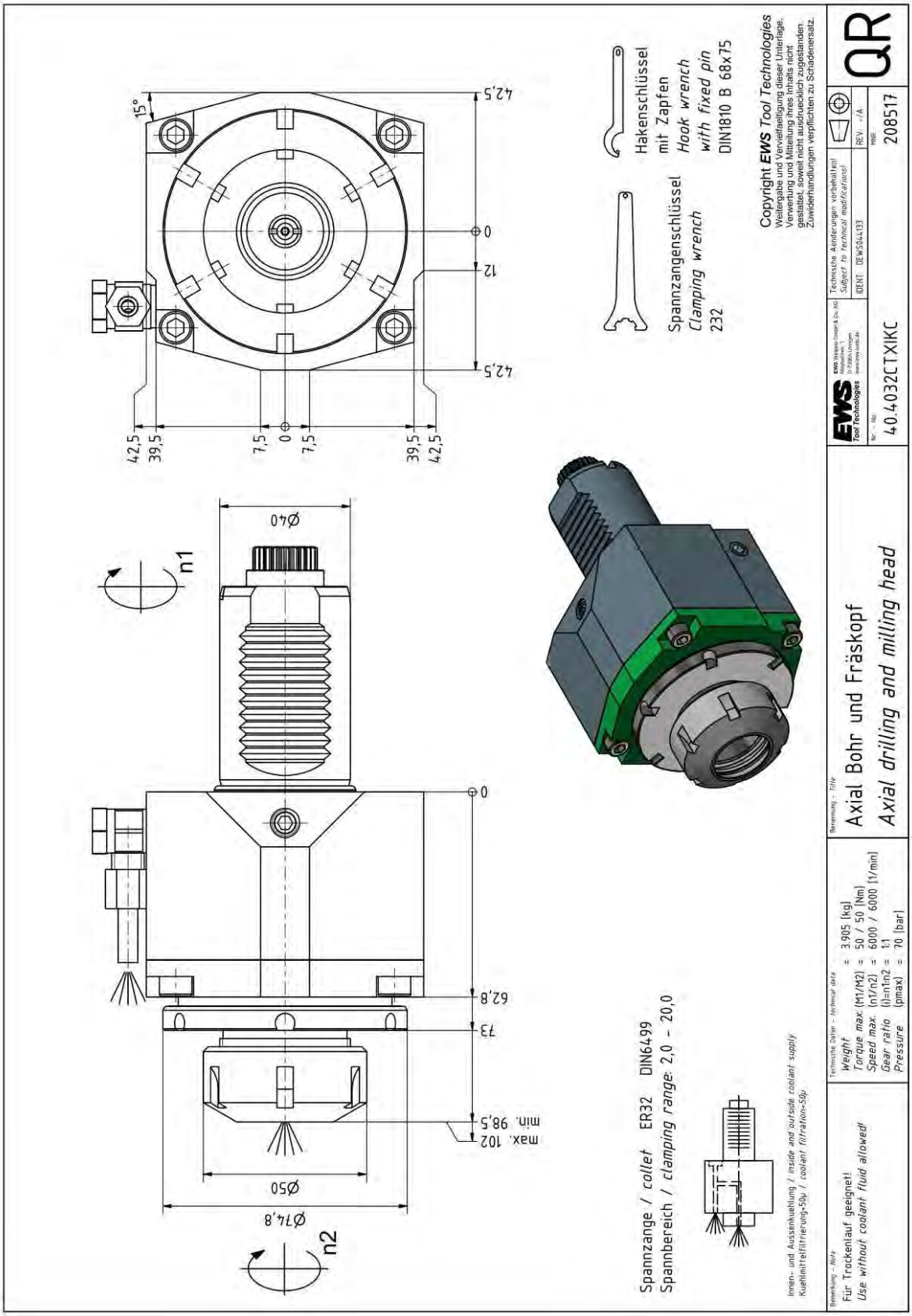

Axial drilling and milling head

Pos.: 81
MNR: 195325
KTXT: 40.4032KCTXIKCIM

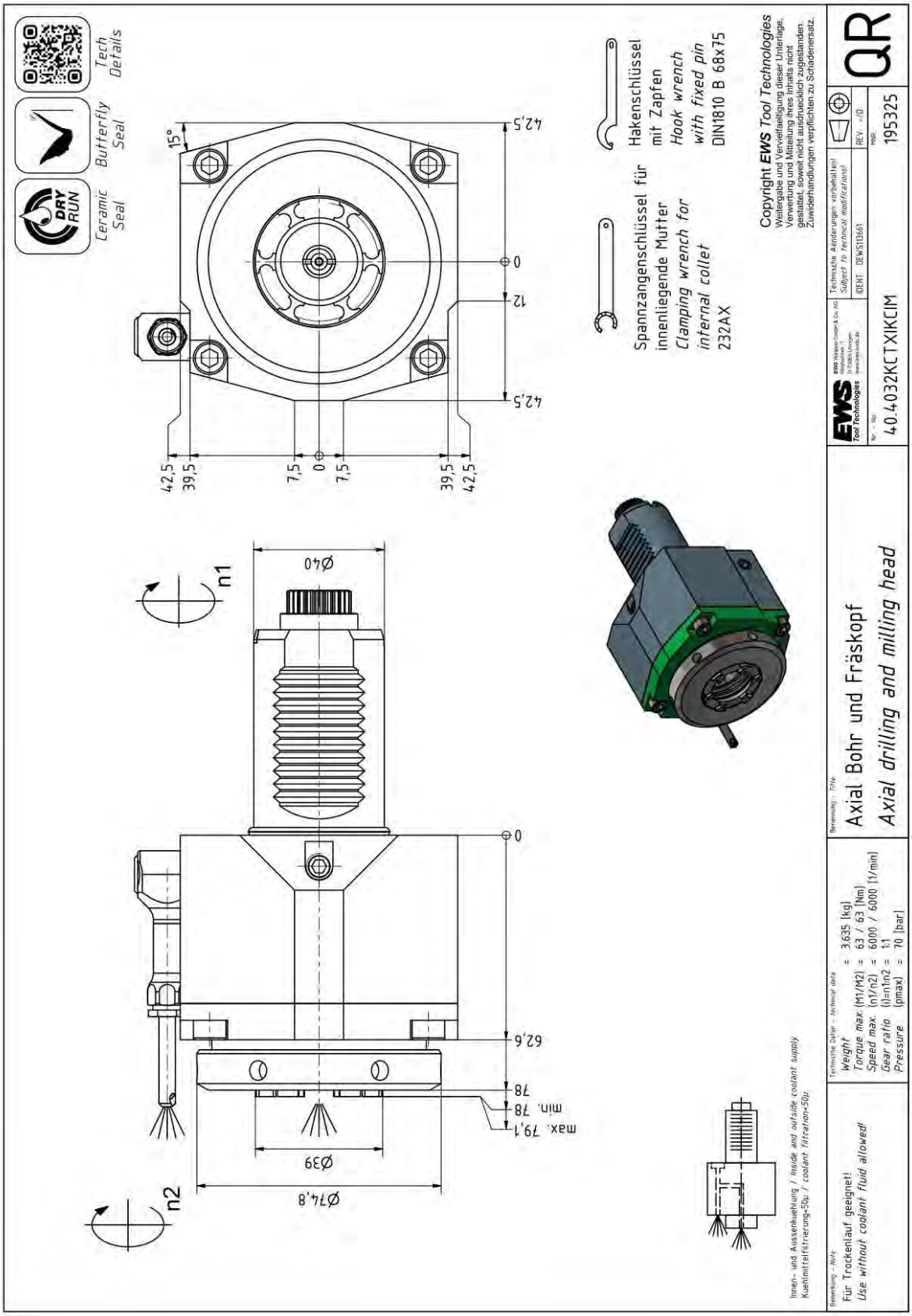

Axial drilling and milling head

Pos.: 82
MNR: 100574
KTXT: 40.4032CTX

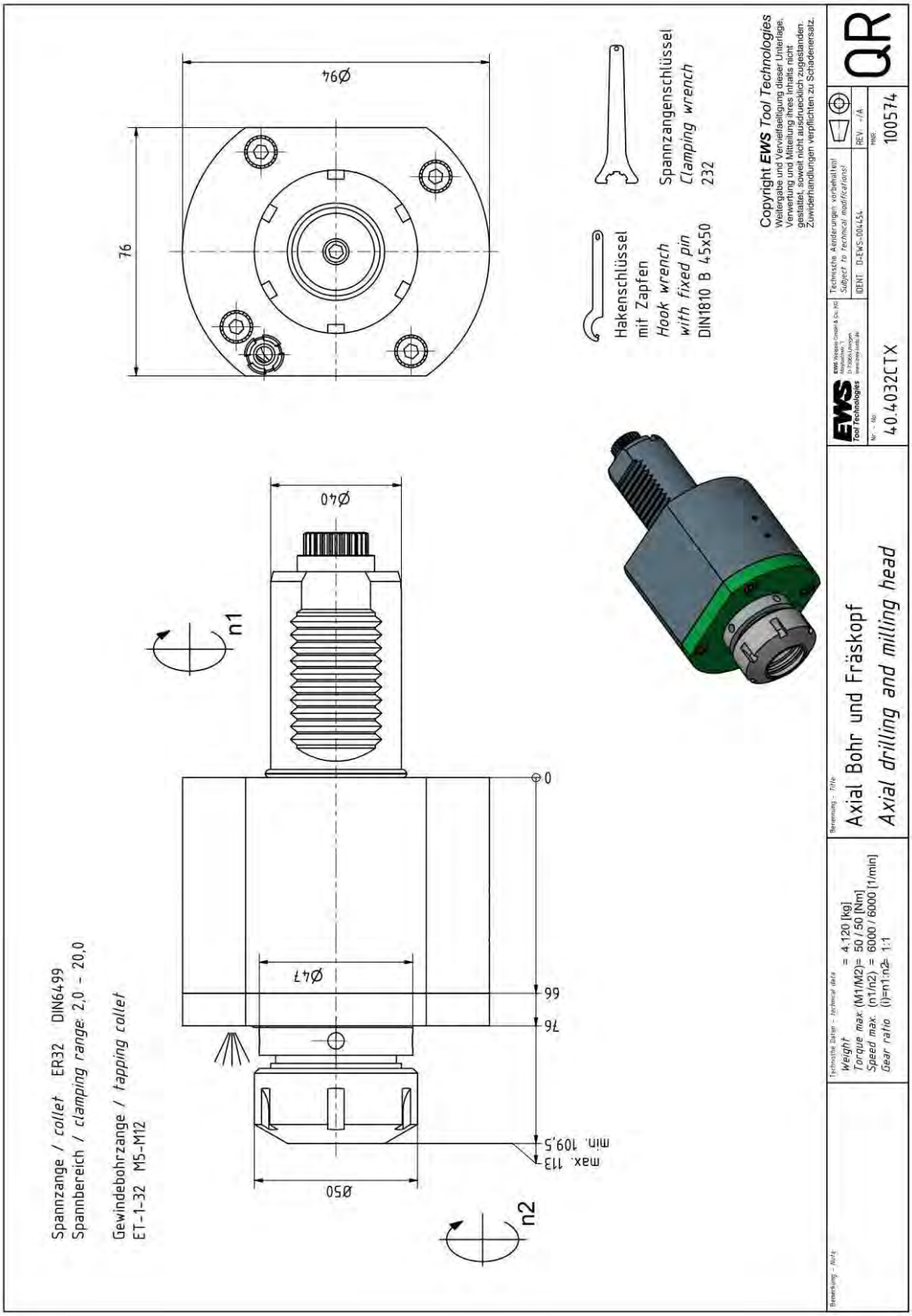

Radial drilling and milling head

Pos.: 83
MNR: 140399
KTXT: 60.4032LCTXLIKDIM

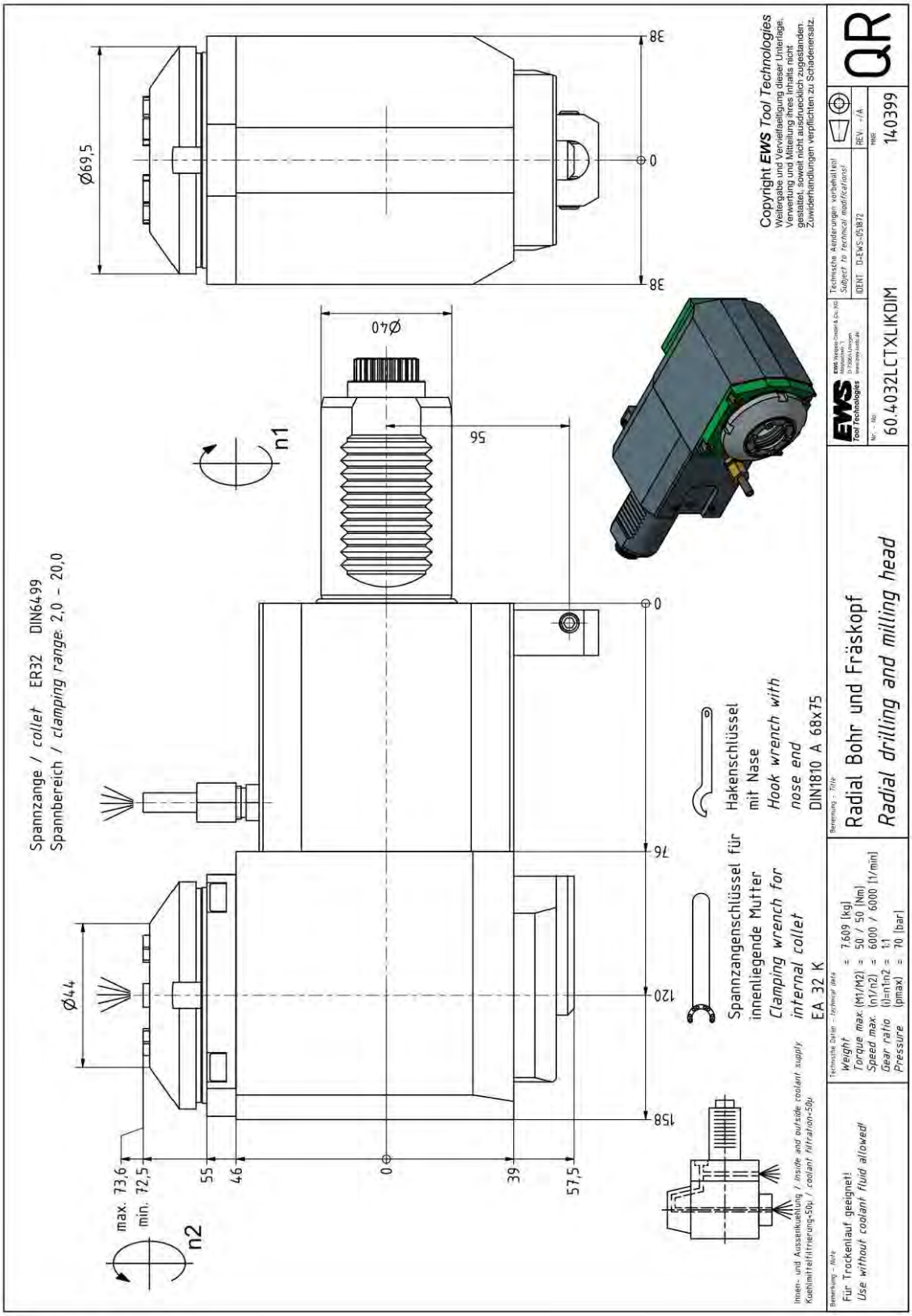

Radial drilling and milling head

Pos.: 84
MNR: 139320
KTXT: 60.4032LCTXLIM

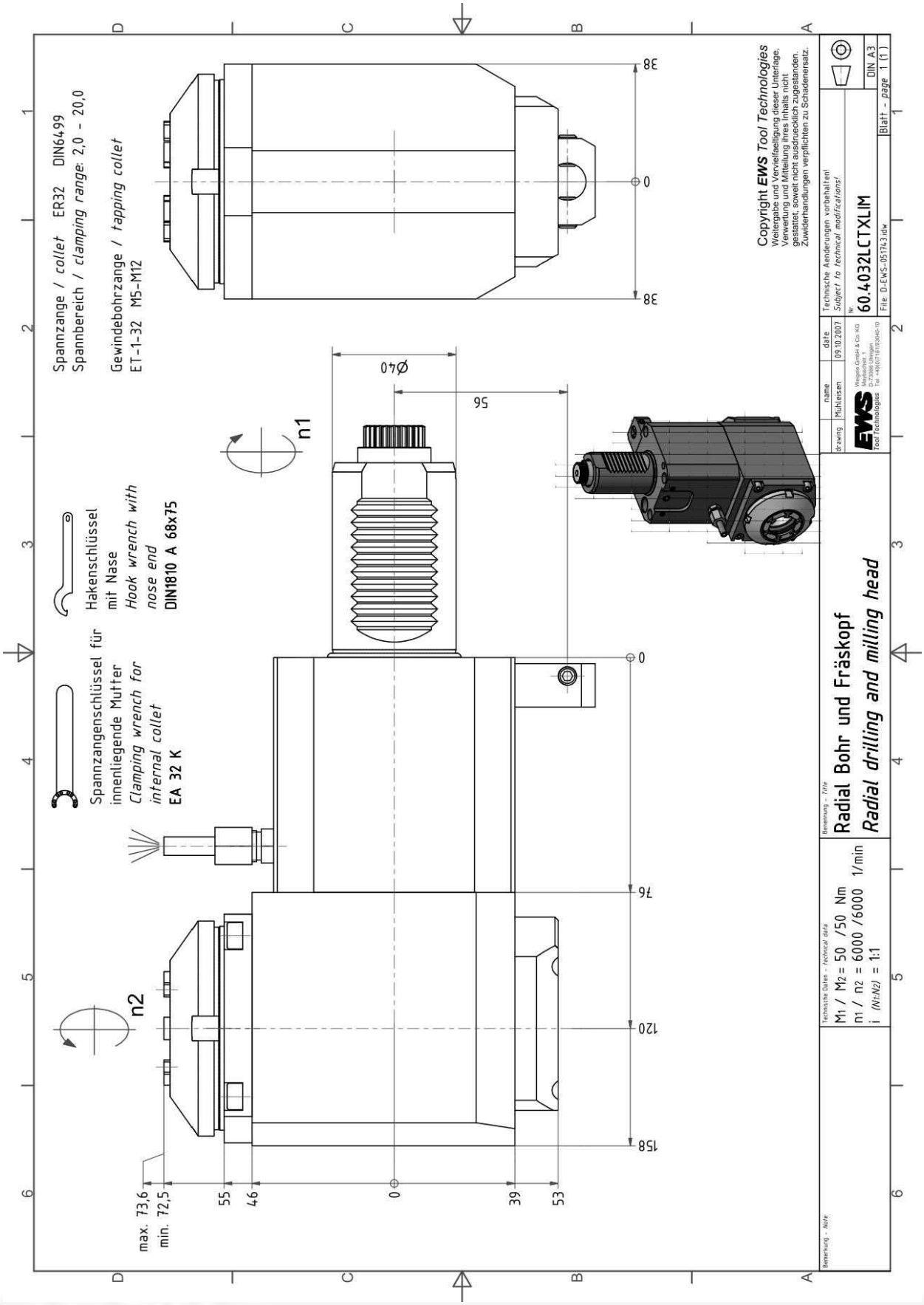

Radial drilling and milling head

Pos.: 85
MNR: 155767
KTXT: 60.4025DYCTXRLTK60

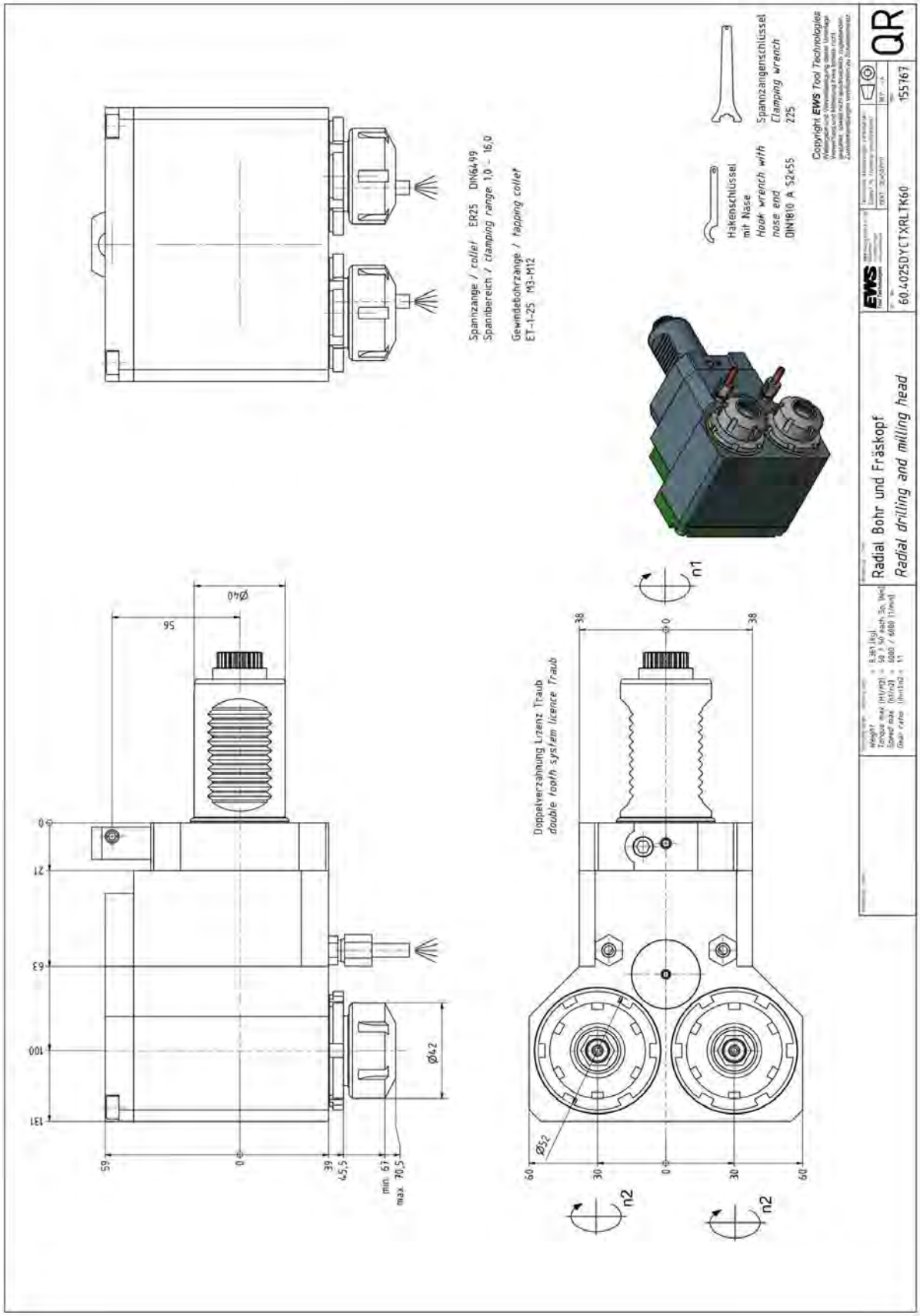

Swivel head

Pos.: 86
MNR: 144013
KTXT: 63.4025CTXIKD

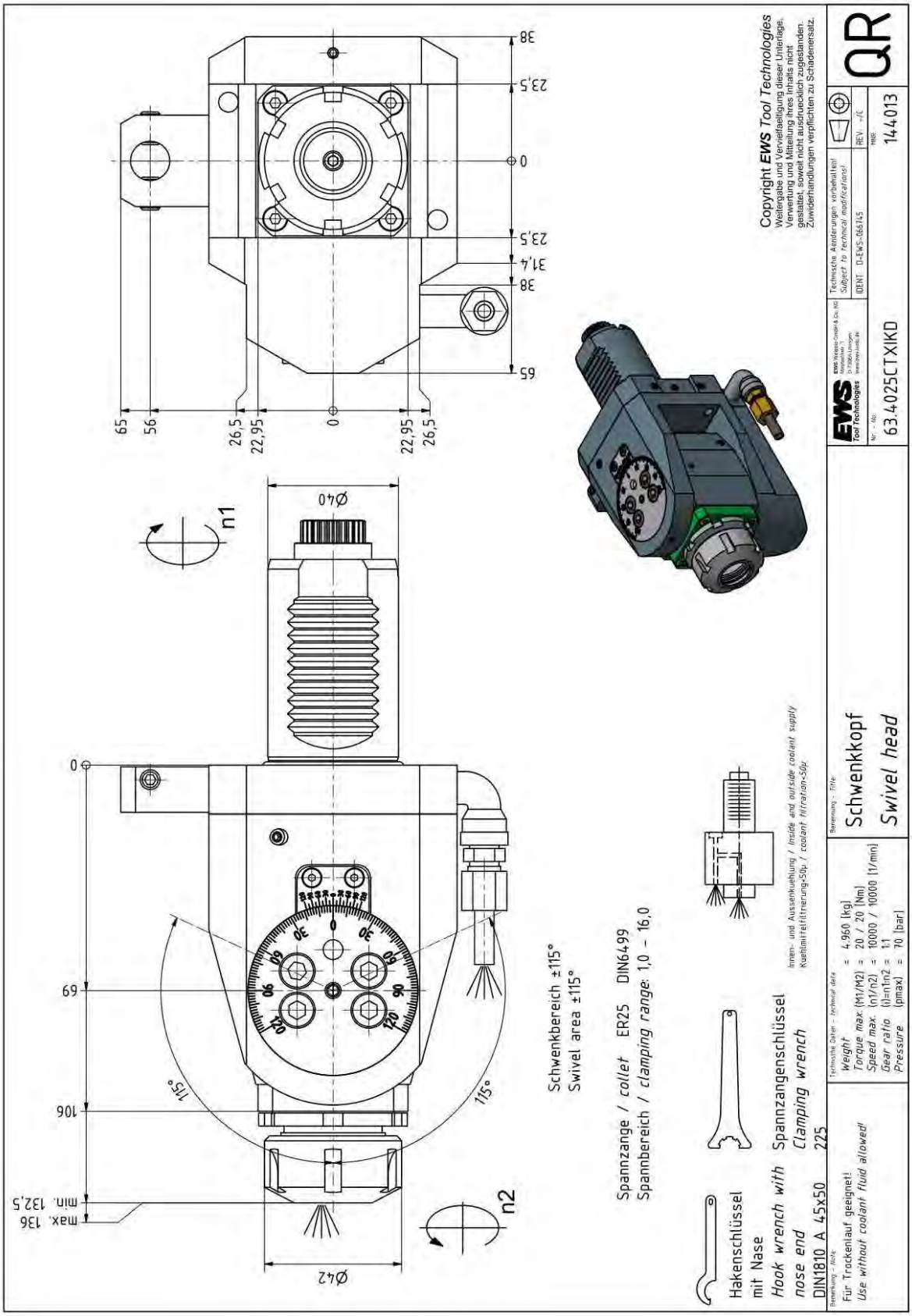

Swivel head

Pos.: 87
MNR: 109831
KTXT: 63.4025CTX

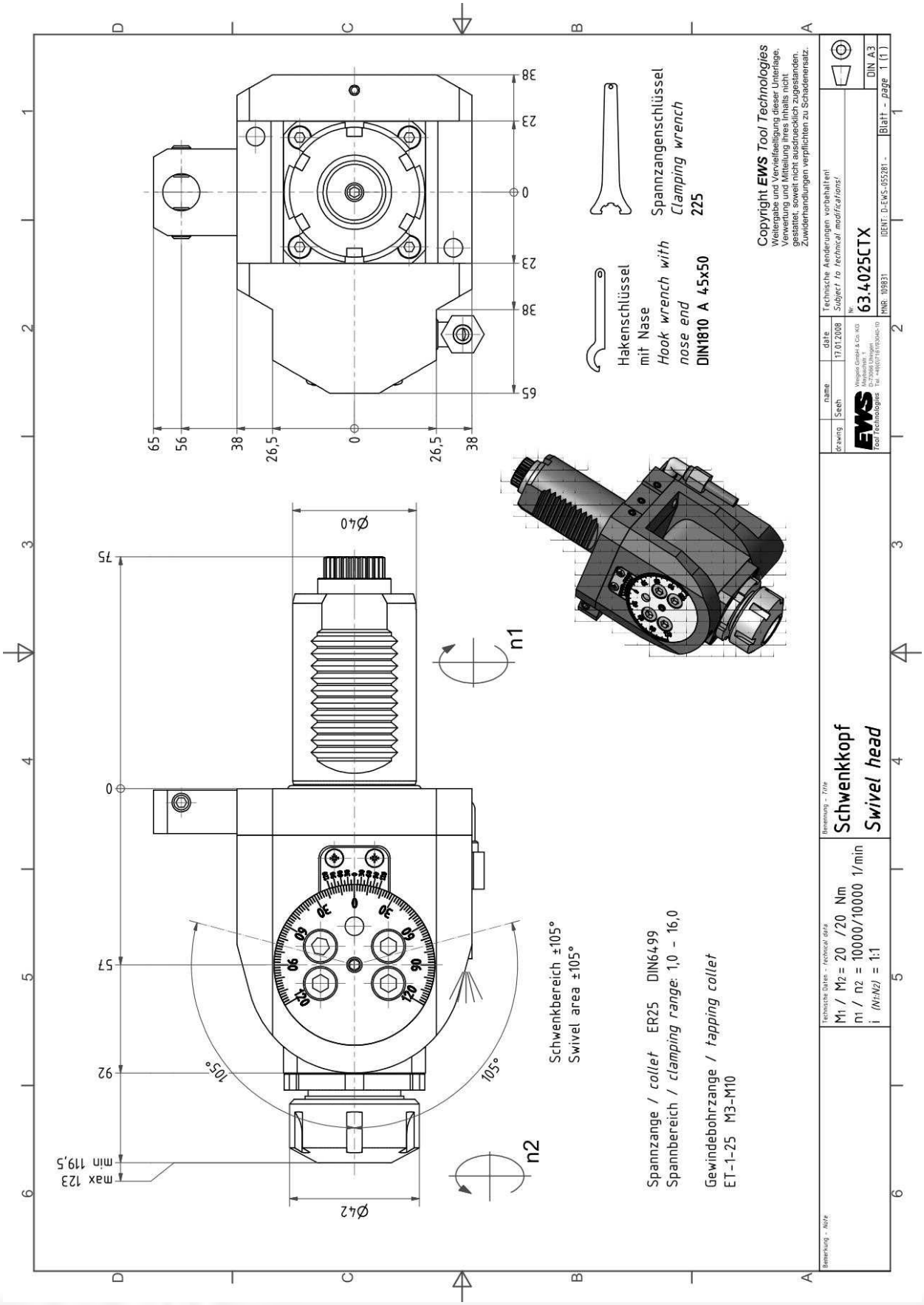

Boring bar holder

Pos.: 90
MNR: 209428
KTXT: 19.40VX3-ZYL

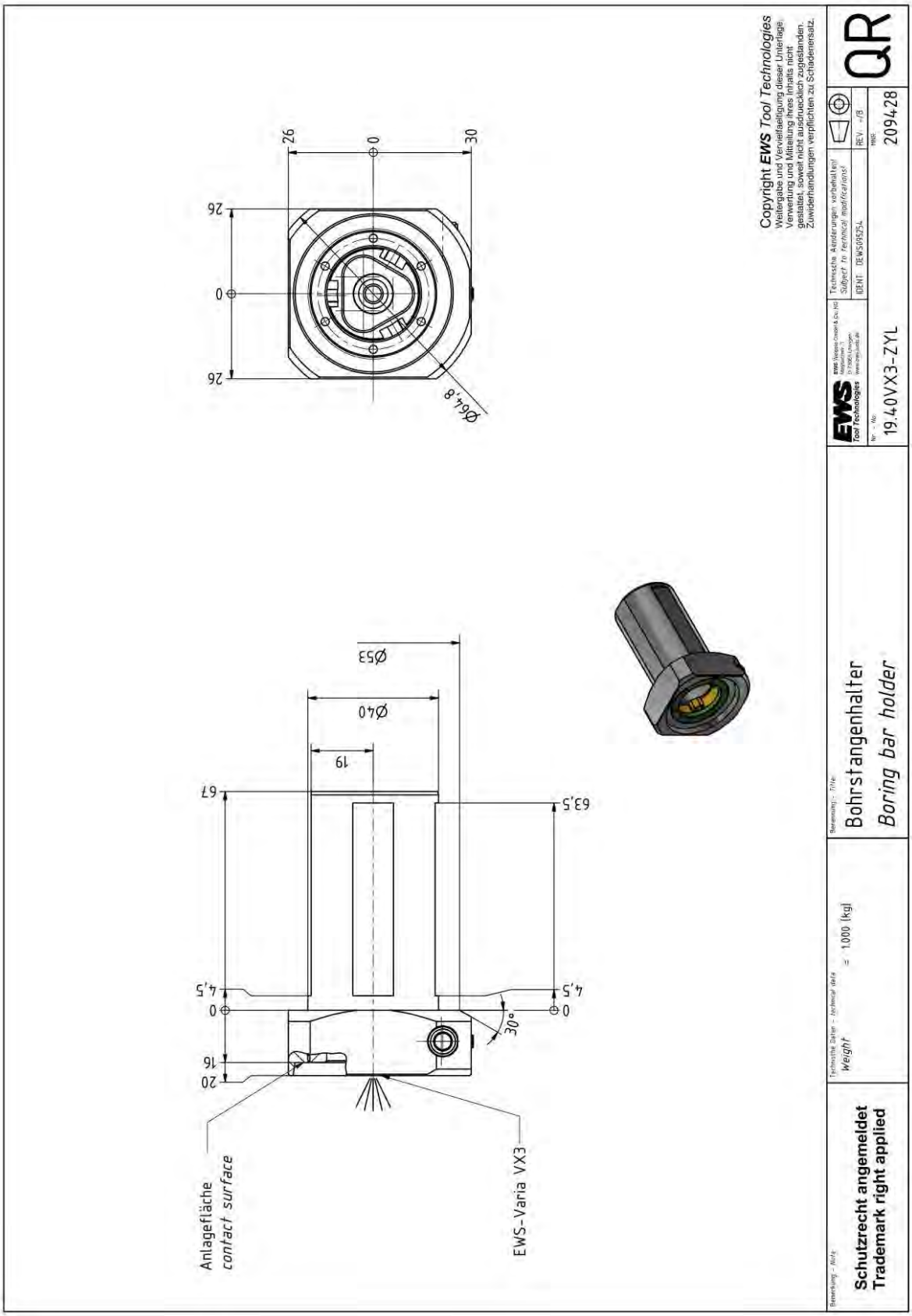

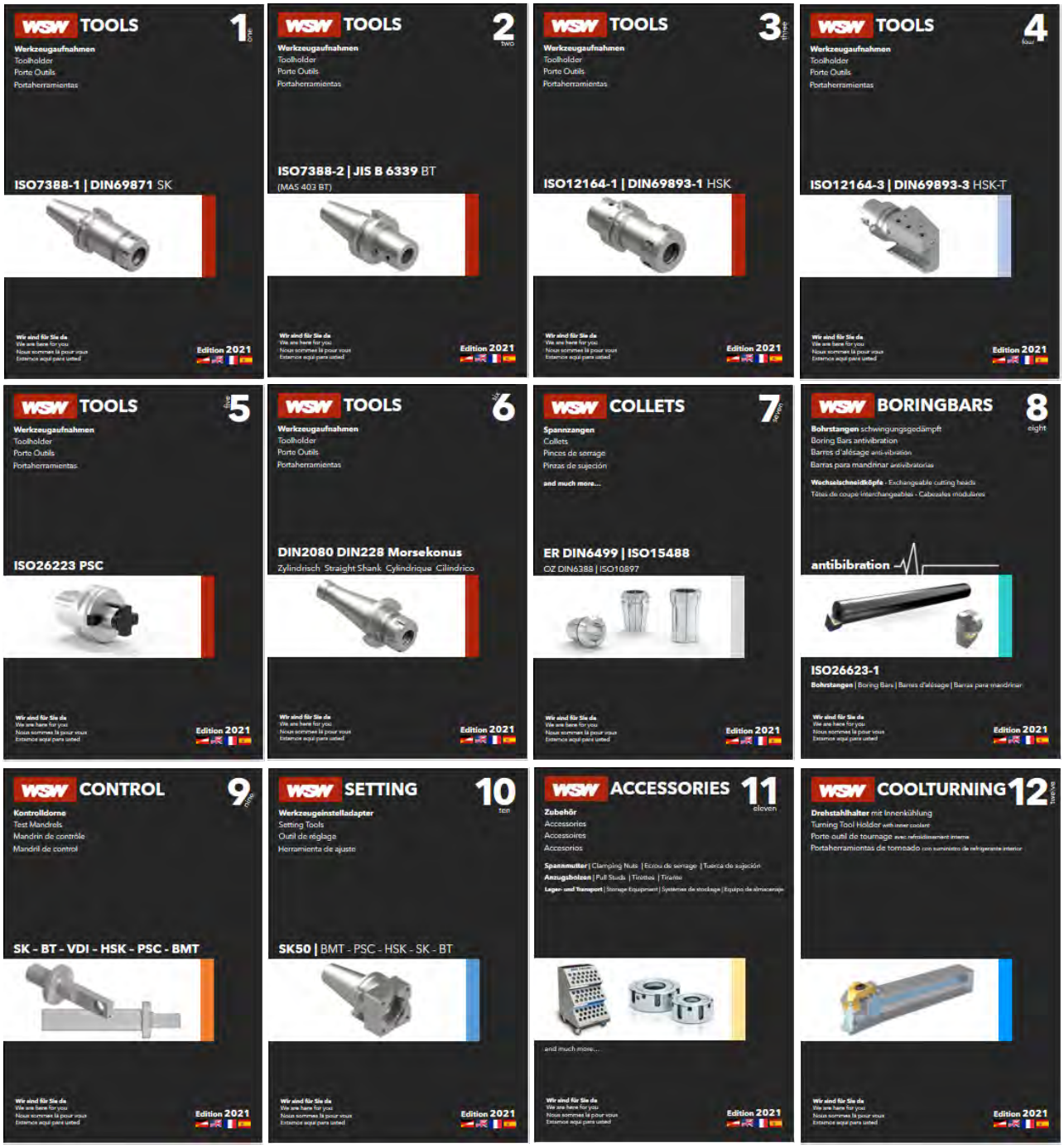

WSW SINCE1987
Solutions from a single source

wsw-tools.de

Tooling Systems and Turrets

EWS Group

EWS Tool Technologies

EWS Weigele GmbH & Co. KG
Maybachstraße 1 · D-73066 Uhingen
Telefon +49(0)7161-93040-100
Telefax +49(0)7161-93040-30
E-Mail: info@ews-tools.de
www.ews-tools.de

EWS Group WSW Tooling Systems

WSW Spannwerkzeuge-Vertriebs GmbH
Maybachstr. 1 · D-73066 Uhingen
Telefon +49(0)7161-93040-100
Telefax +49(0)7161-93040-30
E-Mail: contact@wsw-tools.de
www.wsw-tools.de

EWS Group COMMAND TOOLING SYSTEMS

Command Tooling Systems
13931 Sunfish Lake Blvd NW
Ramsey · MN 55303 USA
Telefon +1-763-576-6910
Telefax +1-763-576-6911
support@commandtool.com
www.commandtool.com

EWS Korea

EWS Korea Co. Ltd.
80-101, Golden root-ro,
Juchon-myeon, Gimhae-si,
Gyeongsangnam-do, Korea
Telefon +82 55-267-8085
Telefax +82 55-262-3118
E-Mail: info@ewskorea.co.kr
www.ewskorea.co.kr

EWS Russia

EWS Ltd.
Krassnaja str., 38
600015 Vladimir
Russland
Telefon +7-4922-541160
Telefax +7-4922-541160
E-Mail: info@ews-russland.ru
www.ews-russland.ru

EWS 易德斯 Turrets & Tool holders

JIANGSU EWS MACHINE CO.,LTD
37 hao xizhangzhenbeilu
fenghuangzhen zhangjiangang
China
Telefon +86-512-5842-9991
Telefax +86-512-5842-9990
yujo@ewskorea.co.kr

EWS Tool Technologies 埃维斯刀座技术（太仓）

EWS Tool Holder Technologies (Taicang Co. Ltd)
Beijing East Road No. 88
215400 Taicang · Jiangsu
P. R. China
Telefon +86 512 3306 2600
Telefax +86 512 3306 2601
E-Mail: sales.cnews-tools.de
www.ews-tools.cn

TOOL ARENA CONNECTING COMPANIES

Tool-Arena GmbH
Maybachstraße 1 · D-73066 Uhingen
Telefon +49(0)7161-93040-100
E-Mail info@tool-arena.com
www.tool-arena.com

EWS Turkey

EWS Tutucu Sistemleri ve Taretleri Anonim Şirket
Aydınlı mah.Melodi No.2/19 Sk. Bilmo San.Sit. 18-19
34956 Tuzla / Istanbul
Turkey
Telefon +90-216-593-22-44
E-Mail: mehmet@ewstools.com
www.ews-tools.de

Stand / updated: 10/2021